item

Systematic innovation

New Products 2018/ I

Experience innovation – new item products for 2018/ I

5 MB Building Kit System

New flexibility! Space-saving folding doors can be easily built using the tried-and-tested item Clamp Profiles 8 32x18. The new **T-Slot Slider 8 for Corner-Fastener 8 32x18** uses the Line 8 system groove of the door frame as a guide. A few components are all you need.

New lightness! The new **Profile 8 320x40 I** is ideal for accommodating high point and line loads. It is an I beam that joins the contours of two Profiles 8 40x40 with a 240 mm high web. That means high bending strength and low material use.

New stability! Building trusses and diagonal struts to add extra rigidity to frames is even easier now with the new **Angle Fasteners** which speed up work considerably. Profiles no longer need to be mitre cut. Depending on the load in question, you can use Profiles 6 30x30 or Profiles 8 80x40.

17 Work Bench System

New independence! Work benches don't always need to be fitted with an electric drive to deliver stepless height adjustment. The new **Table Column Set 4 80x40 H** uses a hydraulic system that can be put to use immediately with no need for venting, thanks to quick-action couplings.

The table columns can be cranked by hand to allow stepless height adjustment by up to 300 mm. A table top with supporting struts and other fixtures can be easily attached, meaning custom work benches can be assembled with very little effort.

20 Lean Production Building Kit System

New clarity! **Slide Strips D30** in five new colours can be used to add low-friction profile protection and colour coding to frames. For example, using colours to indicate the contents of transport trolleys goes a long way toward supporting visual management.

New dependability! The new **Roller D30/D6-16 T1** enhances process reliability in Karakuri/low-cost automation applications. The ball-bearing Roller moves freely at all times, even under load, and keeps carriages moving the way they should.

New workplaces! Mobile work benches based on Profile Tube System D30 can be built using **Table Column Set 4 D40 H** in next to no time. What's more, there's no need for a power socket, since height adjustment is provided courtesy of a ready-to-install, manual hydraulic solution.

26 Automation System

New speed! item **servomotors with absolute encoder** only need one homing run. After that, the position of the carriage can be called up straight away, even if the system has been powered down in between uses.

New links! The **I/O Interface Module (C Series)** connects the signal cables from the system with the digital inputs and outputs of the item C series Controllers.

New hold! The robust **Slide Stop LRE 8** ensures that the carriage stays within its permitted travel range during start-up and operation. It can be positioned at any point along the Line 8 groove of a Linear Unit LRE.

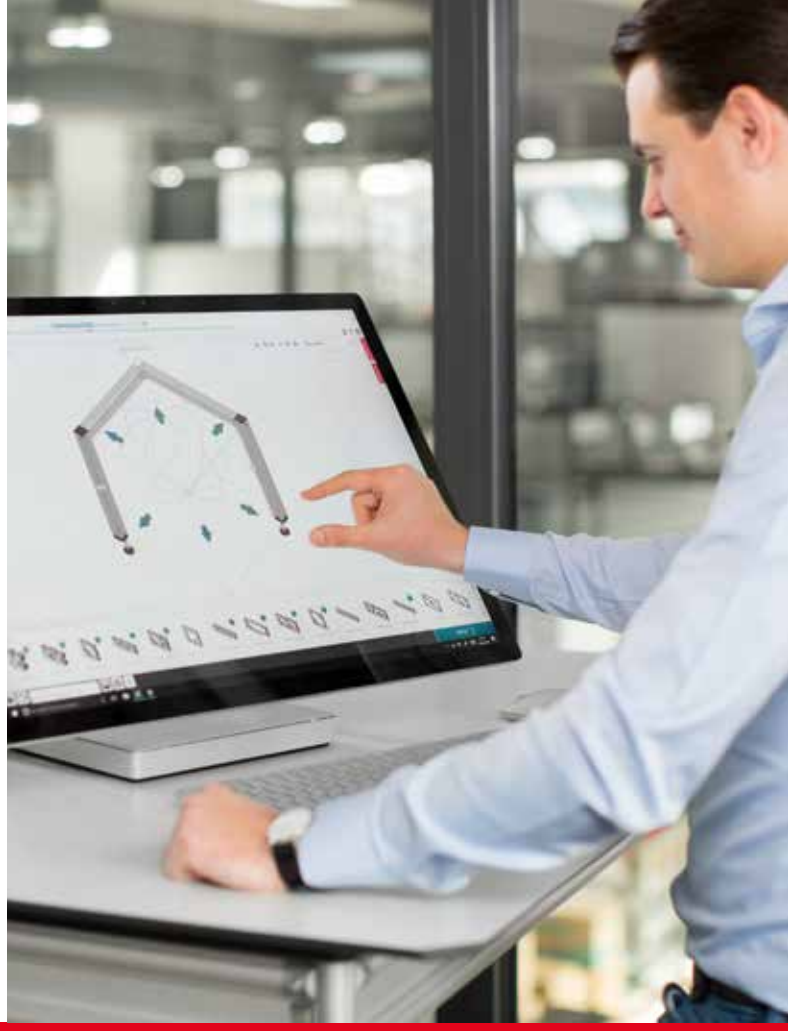

35 Line XMS

New connections! Thanks to **Profile X 8 80x40 2N K15 2T - XMS** you only need one horizontal strut for doors on two levels. That makes it easier to engineer machine cabins with doors arranged one above the other to provide access to different process levels.

The strong profile features two special Line XMS seal grooves and an integrated cable conduit in one neat package. As a result, you can easily build two door frames with one closed, seamless outer side and protect both levels from noise and dust.

37 Online tools

New dimensions! The innovative item **Engineeringtool** offers comprehensive support for engineering and configuration tasks. The software factors in the characteristics of all components, incorporates a user-friendly 3D engineering module and always uses the right accessories. It also supports the digital process chain, including documentation.

New functions! The latest versions of **item MotionDesigner®** and **item MotionSoft®** support all the new additions to the item Automation System. Additional motion profiles have also been added and the selection of accessories simplified.

Factory equipment engineering – with the MB Building Kit System

T-Slot Slider 8 for Corner-Fastener 8 32x18
Caps 6, grey
Angle Fasteners
Screw Anchor ST
Protective Profile 8 40x16 ESD
Profile 8 320x40 l

Silver surfer

The simple solution for folding doors

Glides in the groove of the frame

Tool-free retrofit installation

T-Slot Slider 8 for Corner-Fastener 8 32x18

A small addition with a big impact! T-Slot Slider 8 for Corner-Fastener 8 32x18 is the key to building space-saving folding doors. No special profiles are required. The T-Slot Slider uses the available Line 8 system groove as a guide and the tried-and-tested item door solution based on Clamp Profiles 8 32x18.

With just a few components, you can build an inexpensive folding door that can be fitted very quickly. The slim Clamp Profiles 8 32x18 (0.0.373.67) provide a secure hold for the central panel element.

Meanwhile, the T-Slot Slider hinge insert – which features a spring-mounted guide pin – is pressed into Corner-Fastening Set Clamp-Profile 8 32x18 (0.0.494.73). The plastic slider is inserted into the groove of the frame, then the pin protruding from the corner fastener is introduced into the slider so that the spring-mounted mechanism clips into place in an indentation. This produces a secure, rotating locking arrangement without requiring any additional screw attachment. Cap for Corner-Fastener 8 32x18 in grey (0.0.494.71) can be clipped into place, if required.

Folding door Hinge Al for Clamp Profile 8 32x18 (0.0.666.92) is used to connect together door segments.

Two T-Slot Sliders are needed for each folding door, one of which is installed in the upper groove of the door frame while the other is fitted to the groove at the bottom. The low-friction plastic of the T-Slot Slider does not need to be lubricated and does not require any separate maintenance.

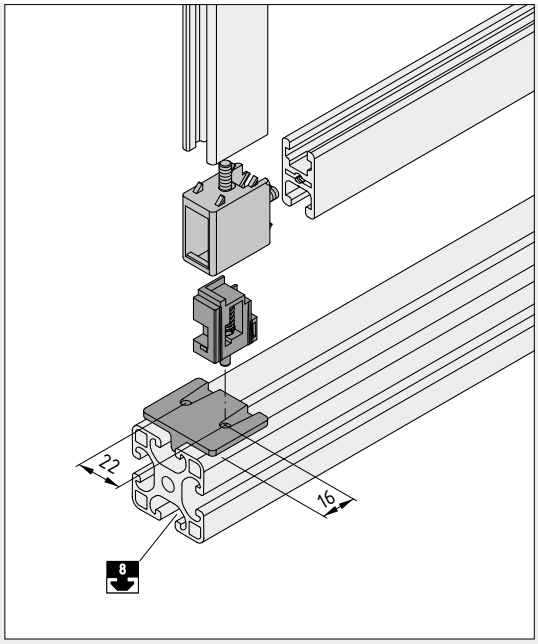

Assembly sequence
1. Introduce the hinge insert into Corner-Fastening Set Clamp-Profile 8 32x18 (0.0.494.73).
2. Fit the T-Slot Slider into the groove of the frame.
3. Clip the guide pin of the hinge insert into the T-Slot Slider.

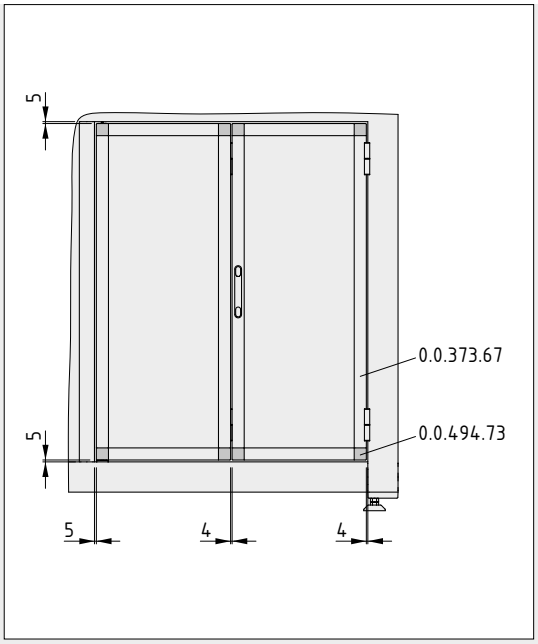

Folding doors made using item Clamp Profiles consist of two segments. The overall area of the doors should not exceed 2 m² for weight reasons. Please observe clearances when calculating lengths.

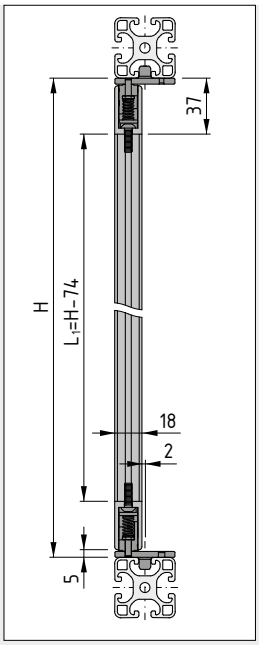

How to calculate the length (L_1) of the vertical frame profile on the folding door in relation to the overall height (H) of the door frame.

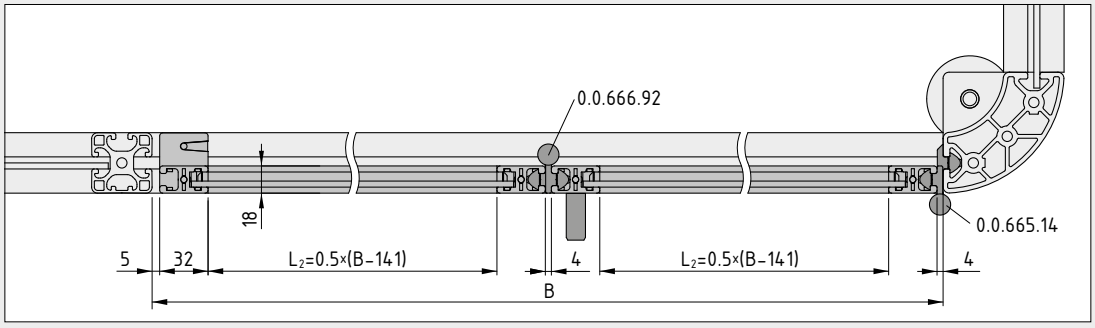

How to calculate the length (L_2) of the horizontal frame profiles on the folding door in relation to the overall width of the door frame. The recommended clearances are factored in.

Straightforward removal using a screwdriver.

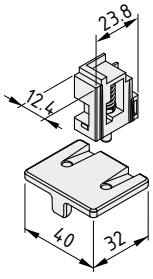

T-Slot Slider 8 for Corner-Fastener 8 32x18	
Hinge insert T-Slot Slider, POM, grey m = 14.0 g	
grey similar to RAL 7042, 1 pce.	0.0.685.48

Caps 6, grey

Safe and practical! item Caps seal the end faces of a Line 6 profile to safely cover over cut edges.

Made of glass-fibre-reinforced plastic, the Caps are simply pushed into place and are now available not just in black but also in grey to match the colour of the anodized aluminium profiles.

Materials used in all the following products:
PA-GF

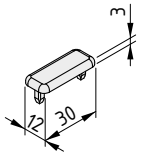

Cap 6 30x12	6
m = 1.0 g	
grey similar to RAL 7042, 1 pce.	0.0.635.31

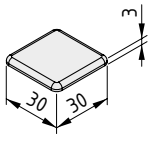

Cap 6 30x30	6
m = 2.6 g	
grey similar to RAL 7042, 1 pce.	0.0.635.15

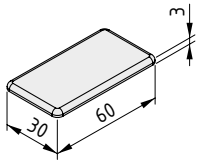

Cap 6 60x30 6

m = 5.0 g

grey similar to RAL 7042, 1 pce. **0.0.635.28**

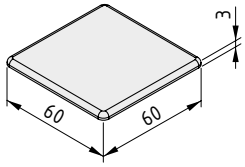

Cap 6 60x60 6

m = 10.0 g

grey similar to RAL 7042, 1 pce. **0.0.635.29**

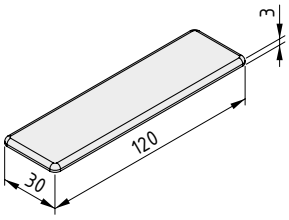

Cap 6 120x30 6

m = 10.0 g

grey similar to RAL 7042, 1 pce. **0.0.635.13**

Strut your stuff

Support struts at a 45° angle

No mitre cut necessary

Can be retrofitted

Angle Fasteners

More hold and less hassle! item Angle Fasteners are used to make 45° struts in next to no time. Simply screw an Angle Fastener to the core bore on each end of a profile and then attach to the frame – no mitre cuts required. The fasteners can also be retrofitted.

item Angle Fasteners are ideal for building trusses, diagonal struts and for adding rigidity to frames. The following variants are available to suit various support struts and frames:

Angle Fastener 6 30x30-45° for attaching a Profile 6 30x30 to a Line 6 groove (0.0.688.68)

Angle Fastener 8 80x40-45°/80 for attaching a Profile 8 80x40 to two Line 8 grooves in a horizontal arrangement (0.0.688.69)

Angle Fastener 8 80x40-45°/40 for attaching a Profile 8 80x40 to a Line 8 groove in a vertical arrangement (0.0.688.70)

Angle Fastener 8 40x40-45° for attaching a Profile 8 40x40 to a Line 8 groove (0.0.677.56)

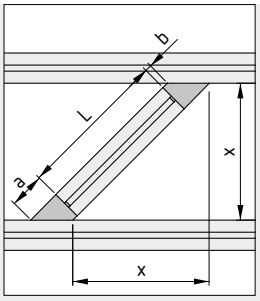

Calculating strut length L:

$$L = \sqrt{2x^2} - (a + b)$$

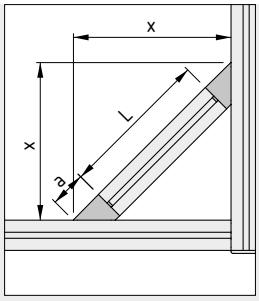

Calculating strut length L:

$$L = \sqrt{2x^2} - 2a$$

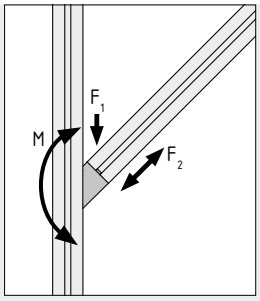

Maximum loading:

Angle Fasteners	F_1	F_2	M
6 30x30-45°	500 N	500 N	18 Nm
8 80x40-45°/80	2000 N	4000 N	50 Nm
8 80x40-45°/40	2000 N	4000 N	200 Nm

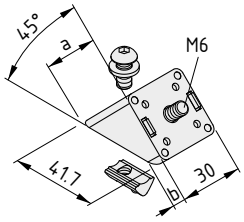

Angle Fastener 6 30x30-45°

Angle Fastener 6 Zn, die-cast zinc, RAL 9006, white aluminium
2 Button-Head Screws ISO 7380-M6x14, St, bright zinc-plated
2 washers DIN 125-6.4, St, bright zinc-plated
T-Slot Nut 6 St M6, bright zinc-plated
a = 35.4 mm
b = 6.3 mm
m = 73.6 g

1 set	0.0.688.68

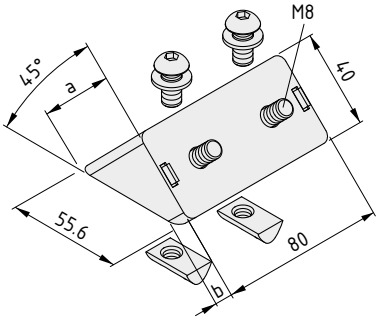

Angle Fastener 8 80x40-45°/80

Angle Fastener 8 Zn, die-cast zinc, RAL 9006, white aluminium
4 Button-Head Screws ISO 7380-M8x18, St, bright zinc-plated
4 washers DIN 125-8.4, St, bright zinc-plated
2 T-Slot Nuts 8 St M8, bright zinc-plated
a = 47.3 mm
b = 8.5 mm
m = 323.0 g

1 set	0.0.688.69

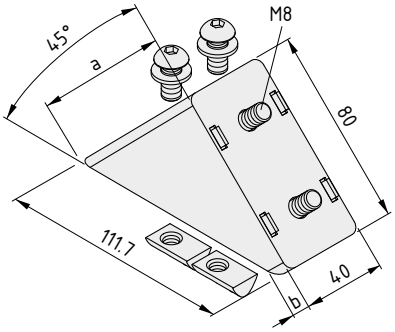

Angle Fastener 8 80x40-45°/40

Angle Fastener 8 Zn, die-cast zinc, RAL 9006, white aluminium
4 Button-Head Screws ISO 7380-M8x18, St, bright zinc-plated
4 washers DIN 125-8.4, St, bright zinc-plated
2 T-Slot Nuts 8 St M8, bright zinc-plated
a = 87.0 mm
b = 8.5 mm
m = 470.0 g

1 set	0.0.688.70

Firmly anchored
Easy-to-install floor fixing
Also suitable for cracked concrete
Removable

Screw Anchor ST

It doesn't get any faster! The item Screw Anchor can be used to fix machinery, stairways, guards and racks securely to the floor or walls. The Screw Anchor is installed directly into the subfloor and doesn't need any dowels or other filler materials, which saves time and worksteps.

First, drill a suitable hole in the supporting subfloor, then use an impact driver to fix the item Screw Anchor in place. The specially shaped tip and cutting edges at the side ensure optimum setting characteristics. The Screw Anchor even has ETA approval for cracked concrete. What's more it can be unscrewed and removed, leaving no protruding contours in the floor when removing plant.

The Screw Anchor is available for floor and wall fixings that use screw sizes of ∅6, ∅8 and ∅10.

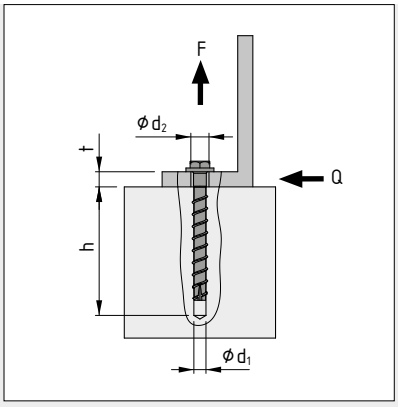

Assembly sequence

1. Use a hammer drill and masonry bit to drill a hole of sufficient depth.
2. Use a blow-out pump or suction to clean out the hole.
3. Use an impact driver to screw Screw Anchor ST into the concrete floor.

Screw Anchor	d_1	d_2	h	t		$F_{max.}$	$Q_{max.}$
ST 6x60	∅6	∅9	70 - t	5-25		2400 N	6000 N
ST 8x85	∅8	∅12	95 - t	15-35	t = 15mm:	5700 N	8100 N
					t = 35mm:	2900 N	4300 N
ST 10x110	∅10	∅14	120 - t	35-55	t = 35mm:	7700 N	13300 N
					t = 55mm:	4600 N	4600 N

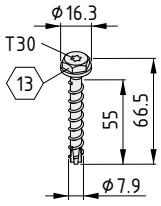

Screw Anchor ST 6x60

St
M = 18 Nm m = 20.0 g

bright zinc-plated, 1 pce. 0.0.689.06

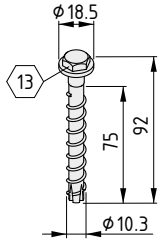

Screw Anchor ST 8x85

St
M = 55 Nm m = 45.0 g

bright zinc-plated, 1 pce. 0.0.689.07

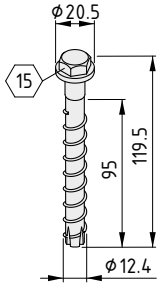

Screw Anchor ST 10x110

St
M = 55 Nm m = 87.0 g

bright zinc-plated, 1 pce. 0.0.688.05

Guardian angel

Elastic protection for profiles

Simply press into the groove

Electrostatically dissipative

Protective Profile 8 40x16 ESD

Twice the protection! The elastic Protective Profile 8 40x16 ESD features hollow cavities and effectively absorbs impacts and other mechanical influences. Protective Profile 8 40x16 R16 ESD also covers the outer radius of a Line 8 profile. Furthermore, the electrostatically dissipative polymer protects against static charging.

Protective Profiles are pressed into the Line 8 groove and several can be installed next to each other to protect larger areas. On the one hand, they offer crash protection for profiles and, on the other, they prevent transported goods and frames from being scratched. Unlike with foam, point loads do not result in permanent indentations on these profiles.

Elastic Caps cover the end faces of the Protective Profiles. ESD protection can be retained when using Cap for Protective Profile 8 40x16 (0.0.474.74) and Cap for Protective Profile 8 R16-90° (0.0.474.73).

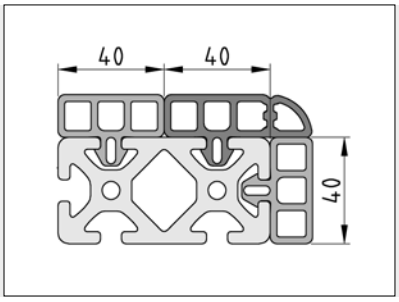

The Protective Profiles have a modular dimension of 40 mm.

Large cross-sections of Line 8 Profiles can be protected effectively by combining several Protective Profiles.

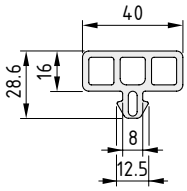

Protective Profile 8 40x16 ESD ESD 8

TPE
m = 397 g/m

black, 1 pce., length 2000 mm	0.0.686.88

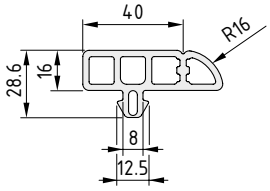

Protective Profile 8 40x16 R16 ESD ESD 8

TPE
m = 508.5 g/m

black, 1 pce., length 2000 mm	0.0.686.90

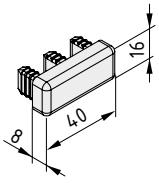

Cap for Protective Profile 8 40x16 8

TPE
m = 6.0 g

black, 1 pce.	0.0.474.74

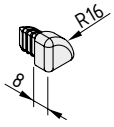

Cap for Protective Profile 8 R16-90° 8

TPE
m = 2.0 g

black, 1 pce.	0.0.474.73

Light and strong

Double profile with web

Low profile deflection

For high loads

Profile 8 320x40 l

Lightweight construction made easy! Profile 8 320x40 l offers high bending strength but makes economical use of materials. It consists of two Line 8 profiles that are permanently joined by a 240 mm high web. The I beam is ideal for accommodating high point and line loads.

Both ends of the profile feature the contour of a Profile 8 40x40, each with three system grooves. The generous profile height delivers a high resistance moment. Profile 8 320x40 l has a low dead weight but exhibits only minimal profile deflection and can cope with considerable loads and transverse forces.

Note: Profile 8 240x40 8N180 light (0.0.678.88) and Profile 8 160x40 4N180 light (0.0.678.85) are box-shaped alternatives with two continuous webs.

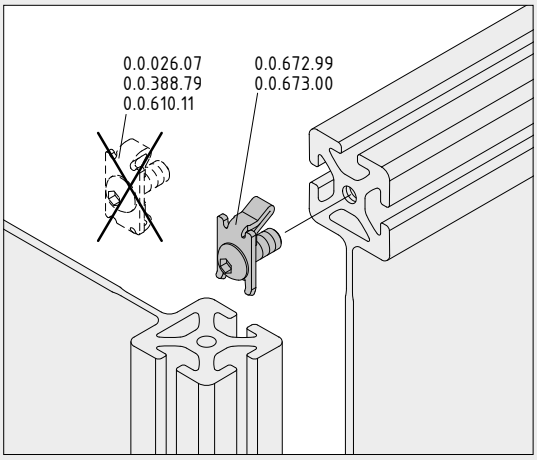

Tip:
Use the item Machiningtool to find the right profile for your application. You can see at a glance which profiles meet specifications in terms of length, load, etc. You can also order the necessary profile machining at the same time:
item.engineering/tools/machiningtool

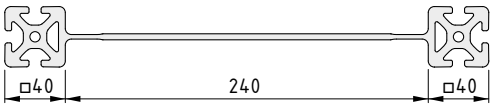

Profile 8 320x40 l							
Al, anodized							
A [cm²]	m [kg/m]	I_x [cm⁴]	I_y [cm⁴]	I_t [cm⁴]	W_x [cm³]	W_y [cm³]	
28.48	7.69	28.34	4,183.33	10.55	14.17	261.46	
natural, cut-off max. 6000 mm							0.0.685.22
natural, 1 pce., length 6000 mm							0.0.685.20

Ergonomic production – with the item Work Bench System

Table Column Set 4 80x40 H

Pump it up!

Stepless crank-operated height-adjustment system

Ready-to-connect hydraulic system

Seamless integration thanks to Line 8 groove

Table Column Set 4 80x40 H

Stepless height adjustment without an electric drive! Table Column Set 4 80x40 H is ideal for mobile work benches and environments where there is no direct power source, ensuring nobody has to work without ergonomic height adjustment or the ability to adapt to different process heights.

The Table Column Set consists of one pump unit and four table columns with the external geometry of Profile 8 80x40. This means other components such as table tops with supporting struts or fixtures can be easily installed. Integrated into each Profile 8 80x40 is a hydraulically operated telescopic table leg shaped like a Profile Tube D30.

The table columns can be cranked by hand to allow stepless and synchronous height adjustment by up to 300 mm. They can accommodate a maximum static load of 2500 N and a maximum dynamic load of 1500 N and the crank features a space-saving fold-away design. The pump unit and table columns are supplied as a ready-to-connect system with quick-action couplings.

Note: The hydraulic height-adjustment system is also available as Table Column Set 4 D40 H with Profile Tube D40 for integration into the item Lean Production Building Kit System.

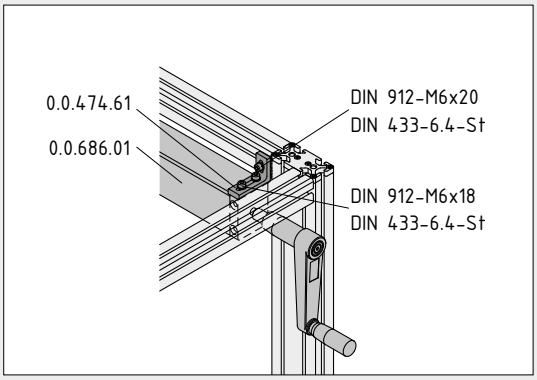

The crank features a space-saving fold-away design and stays connected to the pump unit.

When the crank is not needed, the handle folds under the table top so that there are no protruding parts.

The hydraulic lines can be connected up to the pump unit in next to in time thanks to quick-action couplings.

Seamless integration thanks to Line 8 system groove.

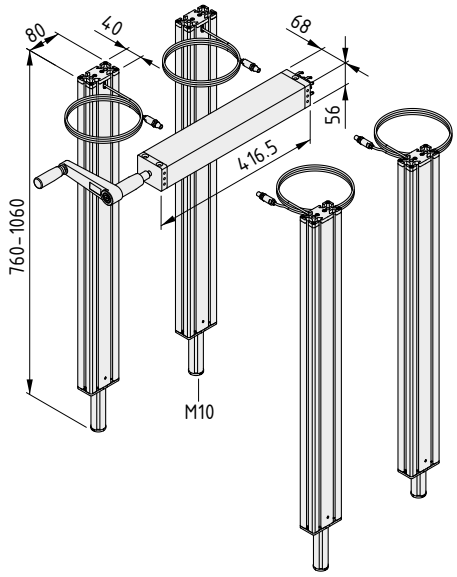

Table Column Set 4 80x40 H	8
4 table columns 80x40 D40 H with hoses Pump unit with fold-away crank Max. system load 2500 N (dynamic: 1500 N) Travel/revolution 6 mm Max. travel 300 mm Restoring force 70 N per table leg Hose length 4x3000 mm Quick-action coupling with check valve Smallest possible bend radius R_{min} of 50 mm when routing hydraulic hoses Min. depth of table 600 mm Fastening materials Notes on Use and Installation m = 15.7 kg	
1 set	0.0.686.01

Build lean – with the Lean Production Building Kit System

Slide Strips D30
Roller Set 8 D30-30 T1
Roller D30/D6-16 T1
Table Column Set 4 D40 H

Signal system

Available in five new colours

As profile protection or identification

Simply clip on

Slide Strips D30

Colour boosts efficiency! The easy-to-install item Slide Strips D30 come in seven different colours, which gives them a dual function – as low-friction profile protection on conveyor lines and colour coding for frames.

Besides the usual black and grey, Slide Strips D30 also come in red, yellow, green, blue and orange. This is a huge help for visual management, as different colours can be used to indicate the contents of a transport trolley. Workers can tell at a glance where rejects need to go and where finished products belong.

In contrast to the colour Profiles D30, which are intended as permanent structures, Slide Strips D30 can be replaced in next to no time. They are simply clipped onto a Profile Tube D30 or Profile 6 D30, are abrasion resistant and leave no traces when removed.

Coloured strips can also be used to indicate fill levels in a FIFO system.

Note: Slide Strip D30 with Side Guide H13 (0.0.671.33) provides a secure hold for transport tasks.

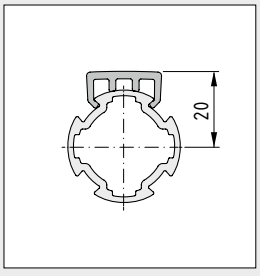

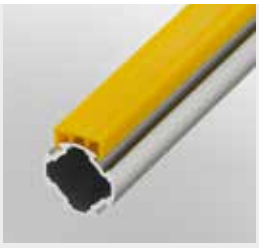

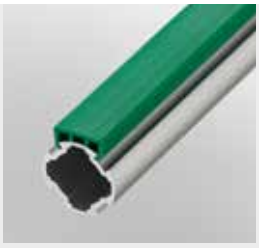

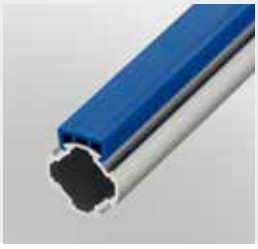

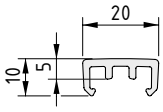

Slide Strip D30	
PE-HD m = 132.0 g	
red similar to RAL 3020, 1 pce., length 2000 mm	0.0.689.47
yellow similar to RAL 1021, 1 pce., length 2000 mm	0.0.689.49
green similar to RAL 6024, 1 pce., length 2000 mm	0.0.689.51
blue similar to RAL 5017, 1 pce., length 2000 mm	0.0.689.53
orange, 1 pce., length 2000 mm	0.0.689.55

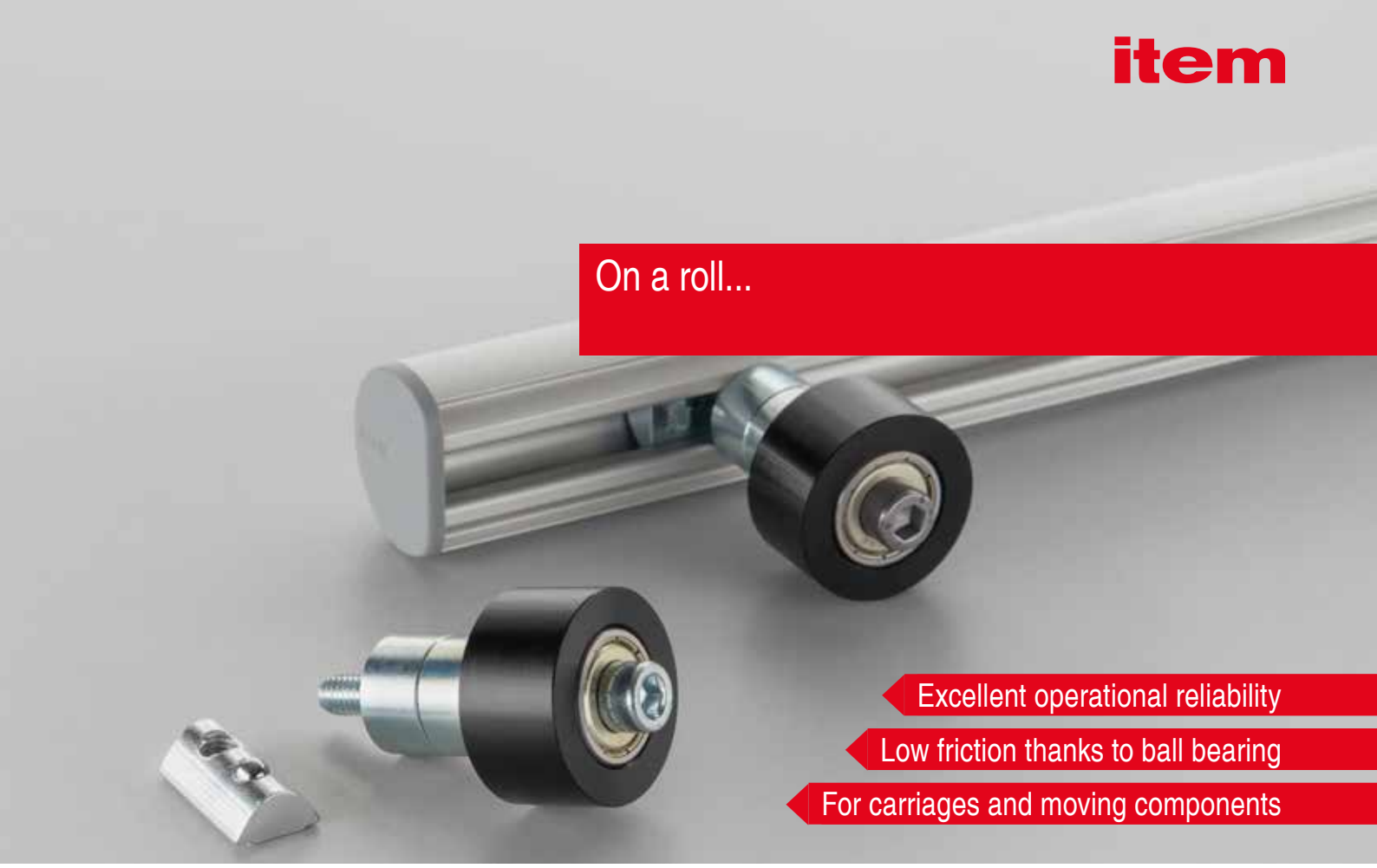

On a roll...

- Excellent operational reliability
- Low friction thanks to ball bearing
- For carriages and moving components

Roller Set 8 D30-30 T1
Roller D30/D6-16 T1

Precise movement under all conditions! Because Roller D30/D6-16 T1 is mounted on a ball bearing, friction changes only marginally under load. As a result, this sturdy Roller keeps carriages and other moving components running smoothly.

For best results, Roller D30/D6-16 T1 should be installed together with Roller D30/D6-16 (0.0.681.68), which has a slight indentation in the centre of the running surface, allowing the use of a Tube or Profile Tube D30 as a guide. Using this combination of Rollers stops carriages jamming as a result of static overdetermination, which ensures Karakuri/low-cost automation solutions can transport light containers.

The preassembled Roller Set 8 D30-30 T1 with T-Slot Nut 8 can be fitted to a Profile Tube 8 D30 or any Line 8 system groove in next to no time. The Spacer Bushings are designed to ensure adequate clearance between the structural profiles and the carriage.

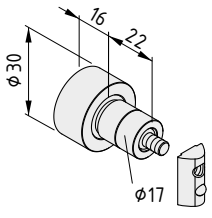

Roller Set 8 D30-30 T1

Roller D30/D6-16 T1, POM
2 Spacer Bushings D17/D6-12, St, bright zinc-plated
Hexagon Socket Head Cap Screw M6x47, St, bright zinc-plated
T-Slot Nut V 8 St M6, bright zinc-plated
m = 79.4 g

1 set	0.0.688.03

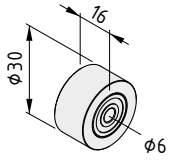

Roller D30/D6-16 T1

Roller D30 T1, POM
2 deep groove ball bearings, St, bright zinc-plated
Spacer, St, bright zinc-plated
m = 28.4 g

1 pce.	0.0.688.00

Table Column Set 4 D40 H

A star turn! Table Column Set 4 D40 H is a ready-to-connect hydraulic solution for steplessly height-adjustable work benches. It consists of a maintenance-free pump unit with crank and four table columns with the external geometry of Profile D40 and preassembled hoses. Thanks to compatibility with Profile Tube System D30, it can be used to build custom table and bench designs.

Quick-action couplings on the pump unit and flexible hoses make installation very easy. Each table leg incorporates a hydraulic cylinder that extends a Profile D30 that can be fitted with Castors or Adjustable Feet. Since no electrical connection is required, Table Column Set 4 D40 H is ideal for mobile work benches.

The height-adjustment mechanism is controlled synchronously by a crank on the pump unit that can be used to adjust the working height steplessly by up to 300 mm. In line with the requirements for an ergonomic working environment, the table can be very quickly adjusted to suit the height of its user.

The maximum dynamic load for height adjustment is 1500 N, while the working surface can accommodate a static load of 2500 N. The integrated crank features a space-saving fold-away design.

Note: Hydraulic height adjustment is also available as Table Column Set 4 80x40 H, which uses Profile 8 80x40 so it can be combined directly with components from the MB Building Kit System.

The four hydraulic telescopic table legs of Table Column Set 4 D40 H can be extended and retracted synchronously using the crank handle. Struts and attachments are connected to the legs using fastening techniques from Profile Tube System D30.

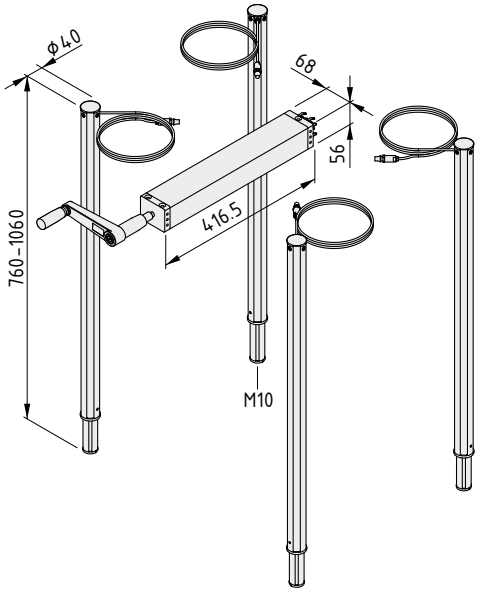

Table Column Set 4 D40 H

4 table columns D40 H with hoses
Pump unit with fold-away crank
Max. system load 2500 N (dynamic: 1500 N)
Travel/revolution 6 mm
Max. travel 300 mm
Restoring force 70 N per table leg
Hose length 4x3000 mm
Quick-action coupling with check valve
Smallest possible bend radius R_{min} of 50 mm when routing hydraulic hoses
Min. depth of table 600 mm
Fastening materials
Notes on Use and Installation
m = 9.0 kg

1 set	0.0.685.64

Boost efficiency – with the item Automation System

Motors SE AK
Data Cables AKSC
I/O Interface Module (C Series)
I/O Cable (C Series)
Proximity Switch Sets
Slide Stop LRE 8

Spot on

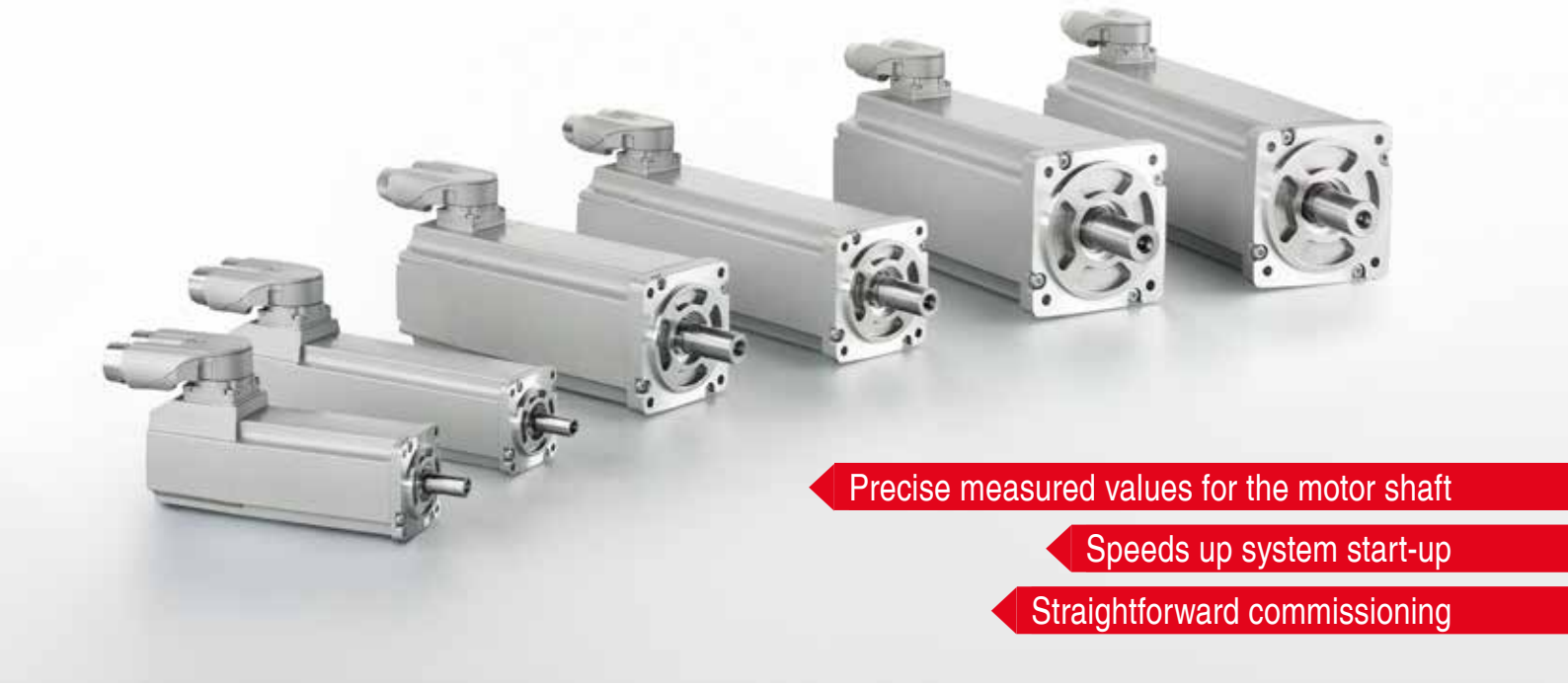

Precise measured values for the motor shaft

Speeds up system start-up

Straightforward commissioning

Motors SE AK
Data Cables AKSC

Precision from the first second! item servomotors with absolute encoder don't require a homing run each time the system is started up. A homing run is only carried out during initial set-up.

The integrated capacitive multiturn absolute encoder helps the Controller keep track of how many revolutions there have been on the motor shaft as measured in relation to the set zero point. Consequently, the system always knows the position of the carriage. The measured value is available immediately after activation because the position is safely stored in the Motor. This speeds up the start-up process for a machine and means users can expand their system with structures that feature a difficult-to-reach homing point.

item Motors SE AK are available in three sizes (40, 60 and 80 mm) that are precisely configured for Gearboxes and Drive Sets in the item Automation System. The servomotors are highly dynamic and the combination of colour-coded plug-in connections and item Power and Data Cables ensures the Motor can be quickly and reliably linked up to the Controller.

Motors SE with absolute encoder use Data Cable AKSC (available in lengths of 5 or 10 metres).

The abbreviation AK in a product name indicates that the motor in question uses a capacitive absolute encoder. The servomotors are also available with a holding brake (indicated in the product name by the letter B). The following models are available:

Motor SE 40-035-3-90-AK

Motor SE 40-035-3-90-AK-B

Motor SE 60-150-3-60-AK

Motor SE 60-150-3-60-AK-B

Motor SE 80-350-5-55-AK

Motor SE 80-350-5-55-AK-B

Note: item Motors SE are also available with a resolver. You can select the design as appropriate to your application. Both Motor variants are supported by item Controllers and item MotionSoft® commissioning software.

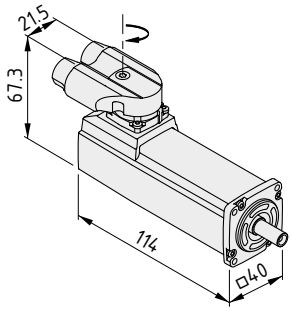

Motor SE 40-035-3-90-AK		
Rated speed	9000	
Intermediate circuit voltage [V]	320	
Rated power	200 W	
Rated torque	0.21 Nm	
Peak torque	1.4 Nm	
Stall torque	0.35 Nm	
white aluminium, similar to RAL 9006, 1 pce.		0.0.688.47

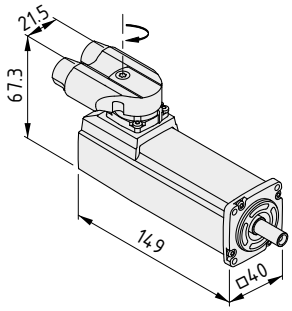

Motor SE 40-035-3-90-AK-B		
Rated speed	9000	
Intermediate circuit voltage [V]	320	
Rated power	200 W	
Rated torque	0.21 Nm	
Peak torque	1.4 Nm	
Stall torque	0.35 Nm	
white aluminium, similar to RAL 9006, 1 pce.		0.0.688.48

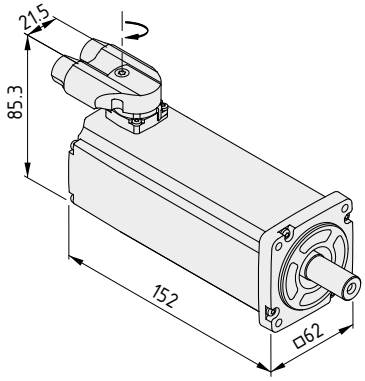

Motor SE 60-150-3-60-AK		
Rated speed	6000	
Intermediate circuit voltage [V]	320	
Rated power	550 W	
Rated torque	0.9 Nm	
Peak torque	6 Nm	
Stall torque	1.5 Nm	
white aluminium, similar to RAL 9006, 1 pce.		0.0.688.49

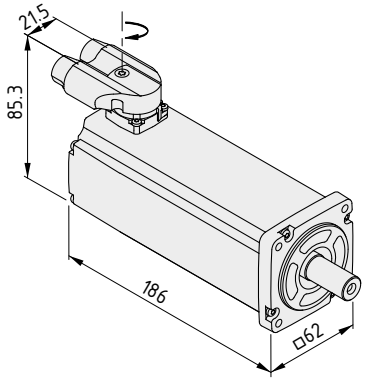

Motor SE 60-150-3-60-AK-B		
Rated speed	6000	
Intermediate circuit voltage [V]	320	
Rated power	550 W	
Rated torque	0.9 Nm	
Peak torque	6 Nm	
Stall torque	1.5 Nm	
white aluminium, similar to RAL 9006, 1 pce.		0.0.688.50

Tip:
Use item MotionDesigner® to plan your Linear Unit. The online tool speeds up the design process and ensures that Motor, Gearbox and all other components are compatible and satisfy the technical requirements of your project. item linear motion units® are supplied preassembled and ready to install: motiondesigner.item24.co.uk

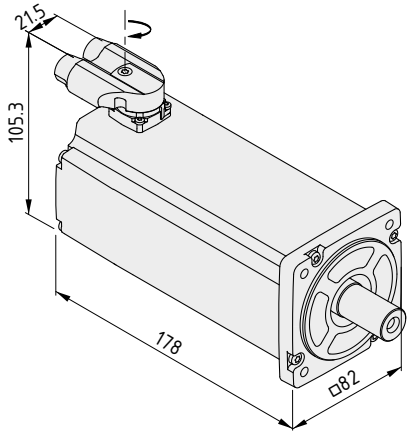

Motor SE 80-350-5-55-AK		
Rated speed	5500	
Intermediate circuit voltage [V]	560	
Rated power	1200 W	
Rated torque	2.1 Nm	
Peak torque	14 Nm	
Stall torque	3.5 Nm	
white aluminium, similar to RAL 9006, 1 pce.		0.0.688.51

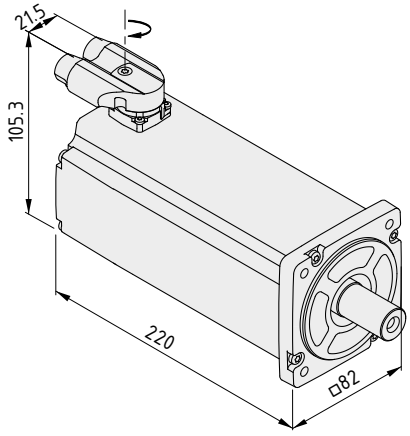

Motor SE 80-350-5-55-AK-B		
Rated speed	5500	
Intermediate circuit voltage [V]	560	
Rated power	1200 W	
Rated torque	2.1 Nm	
Peak torque	14 Nm	
Stall torque	3.5 Nm	
white aluminium, similar to RAL 9006, 1 pce.		0.0.688.52

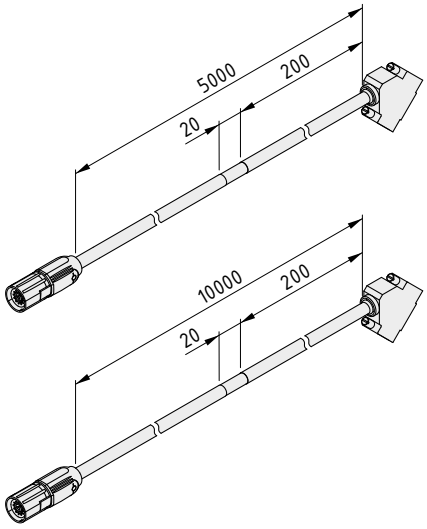

Data Cable AKSC/5	
Cable length 5 m m = 682.0 g	
green, 1 pce.	0.0.688.53

Data Cable AKSC/10	
Cable length 10 m m = 1.3 kg	
green, 1 pce.	0.0.688.54

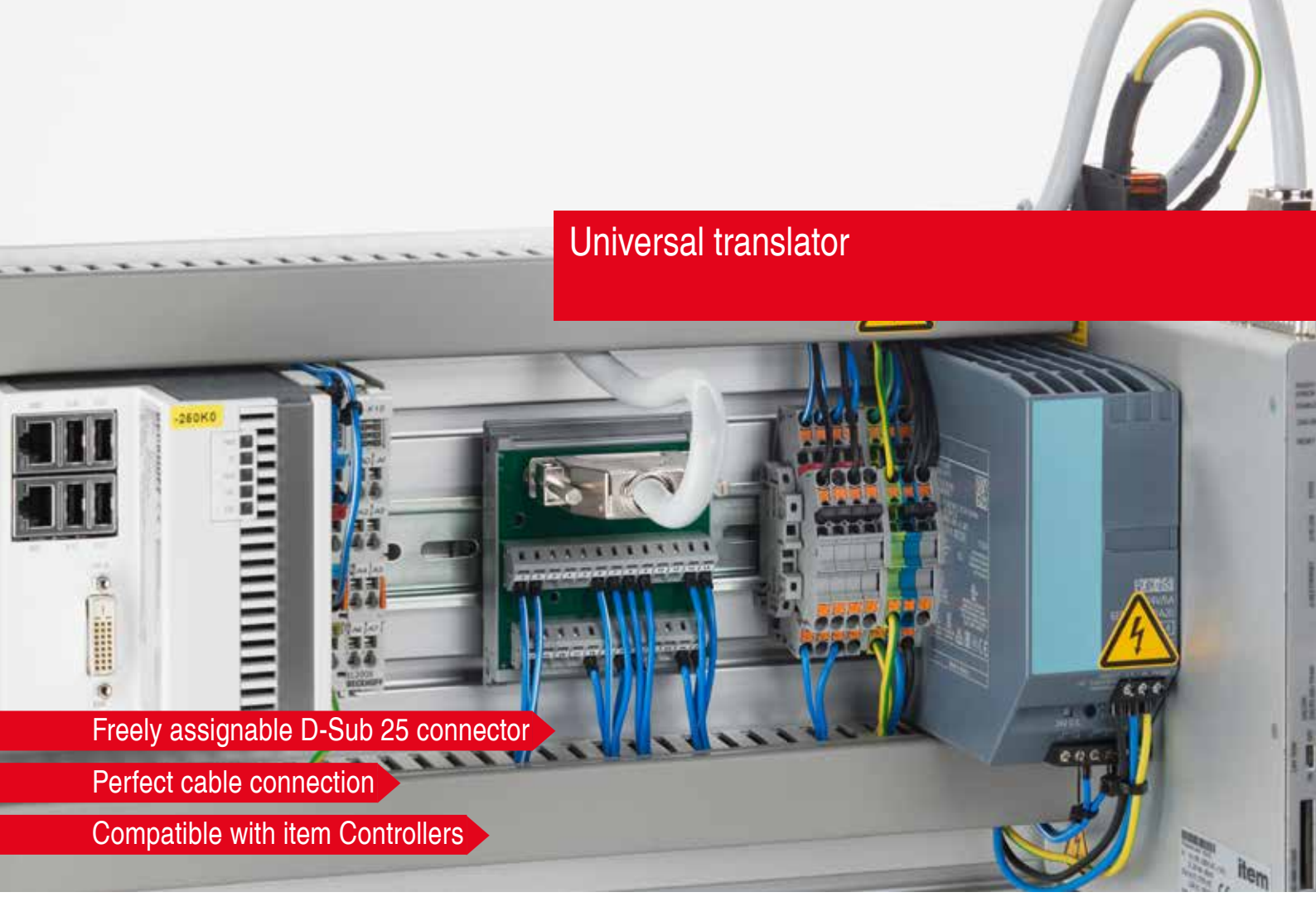

Universal translator

Freely assignable D-Sub 25 connector

Perfect cable connection

Compatible with item Controllers

I/O Interface Module (C Series)

I/O Cable (C Series)

Communication made easy! All item C Series Controllers feature a standardised D-Sub 25 connection (DB-25). I/O Interface Module (C Series) can be used to combine signals from sensors etc. and easily link them up to the digital inputs and outputs of the item Controllers.

The industry-standard Interface Module is mounted on the support rail of an enclosure. Single-wire and fine-stranded conductors can be inserted into the terminal connections and the clear marking of the mounting base speeds up wiring work.

The I/O Interface Module (C Series) incorporates an integrated D-Sub 25 mating connector and is connected to the item Controller using a shielded I/O Cable (C Series). The end result is the flexibility to design a custom solution that slots perfectly into place.

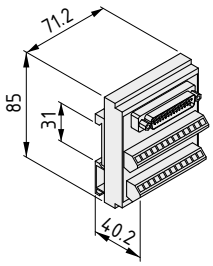

I/O Interface Module (C Series)

D-Sub 25 (pin header)
Singe-wire and fine-stranded conductors 0.08 ... 2.5 mm² accommodated
Mounting type: Support rail 35
IP20 protection
m = 82.0 g

1 pce.	0.0.688.62

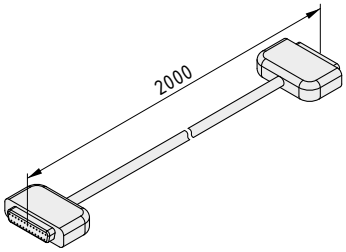

I/O Cable (C Series)

D-Sub 25 connection
Number of poles: 25
Cable length: 2 m
m = 372.0 g

1 pce.	0.0.689.27

Full stop

- Inductive proximity detection
- Compatible with item Linear Units
- All the parts you need in one package

Proximity Switch Sets

Always know your limits! item Proximity Switches are used for homing and for identifying the end positions on linear units. They are inductive devices and send their signals to the Controller via a connecting cable.

The exact combination of components varies according to the model in use and where it is installed. Proximity Switch Sets contain all the components needed for Linear Units KRF, LRE and KGT. When placing an order, please note that some Proximity Switches are available in NO (normally open) and NC (normally closed) versions.

Note: item MotionSoft® commissioning software supports the use of Proximity Switches with item Controllers to ensure systems can be set up very quickly.

Tip:
Use item MotionDesigner® to plan your Linear Unit. The online tool speeds up the design process as appropriate to technical requirements and ensures that all components, including the Proximity Switch Set, are carefully coordinated. item linear motion units® are supplied preassembled and ready to install: motiondesigner.item24.co.uk

The following applies to all the products below:

Inductive proximity switch, positive switching
Housing Al, anodized, natural
Fixing mechanism, fixing screws
Voltage = 10...30 V DC
Switching current$_{max.}$ = 150 mA
Operating distance = 2 mm
Cable, grey, l = 3 m, d = 3 mm

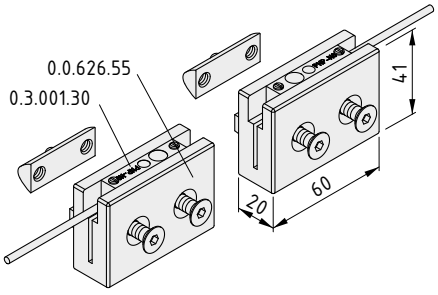

Proximity Switch Set KRF NO 8

2 Limit-Switch Holders 8 KRF
2 Proximity Switches 8 - 1NO
m = 384.0 g

1 pce.	0.0.688.08

Proximity Switch Set KRF NC 8

2 Limit-Switch Holders 8 KRF
2 Proximity Switches 8 - 1NC
m = 384.0 g

1 pce.	0.0.688.09

The following applies to all the products below:

Inductive proximity switch, positive switching
Voltage = 10...30 V DC
Switching current$_{max.}$ = 200 mA
Sensing range = 1.5 mm
LED control display

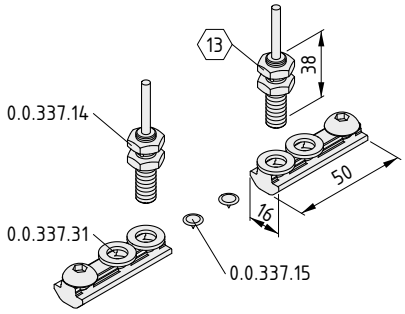

Proximity Switch Set LRE NO 8

2 Proximity Switch fixings 8
2 Proximity Switches M8
2 connecting cables, l = 3 m, d = 3.5 mm
2 Proximity-Switch Cams
m = 191.0 g

1 pce.	0.0.688.11

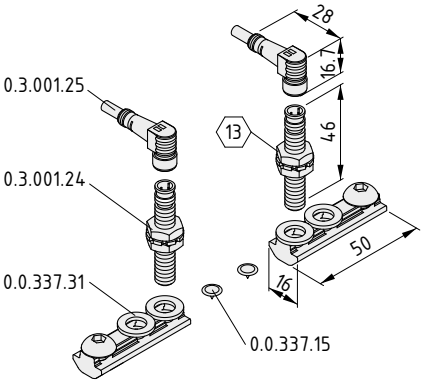

Proximity Switch Set LRE NO, plug-in 8

2 Proximity Switch fixings 8
2 Proximity Switches M8, plug-in
2 Proximity-Switch Connecting Cables, l = 5 m, d = 4 mm
2 Proximity-Switch Cams
m = 405.0 g

1 pce.	0.0.688.10

The following applies to all the products below:

Inductive proximity switch, positive switching
Housing Al, anodized, natural
Fixing mechanism, fixing screws
Voltage = 10...30 V DC
Switching current$_{max.}$ = 150 mA
Operating distance = 2 mm
Cable, grey, l = 3 m, d = 3 mm

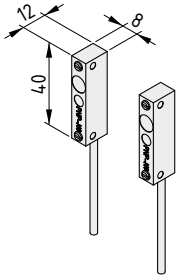

Proximity Switch Set KGT NO	8
2 Proximity Switches 8 - 1NO m = 110.0 g	
1 pce.	0.0.688.12

Proximity Switch Set KGT NC	8
2 Proximity Switches 8 - 1NC m = 110.0 g	
1 pce.	0.0.688.13

Back stop

Robust stop made from aluminium

Simple to install

Slide Stop LRE 8

Keep everything on track! Sturdy Slide Stop LRE 8 stops the carriage of a Linear Unit from overshooting the calculated or desired point. The aluminium travel limiter delivers added safety.

Slide Stop LRE 8 can be easily secured – and even retrofitted – to the Line 8 groove of a Linear Unit LRE. Thanks to its special shape, the Slide Stop can be used with shafts in various diameters and fitted at any position, making it a universal solution.

Note: When configured using item MotionDesigner®, most LRE-type Linear Units from item are automatically fitted with a Slide Stop that can be moved to a different position or removed entirely, as required. Some models, such as Linear Units KLE are designed in such a way that an additional Slide Stop is unnecessary.

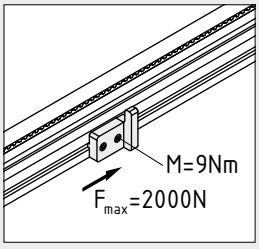

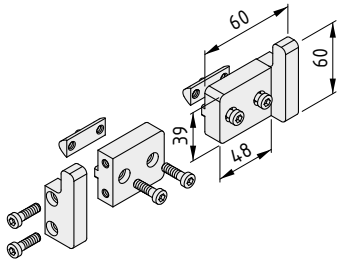

Slide Stop LRE 8	
2 carriers, Al 2 stops, Al 2 T-Slot Nuts 8 St 2xM6-36 8 Hexagon Socket Head Cap Screws DIN 6912 M6x20 m = 283.0 g	
1 set	0.0.686.50

Innovative machine cabins – with Line XMS

Profile X 8 80x40 2N K15 2T – XMS

Twice as good

For doors arranged one above the other

Two seal grooves for shutting out noise and dust

Integrated, compact cable conduit

Profile X 8 80x40 2N K15 2T– XMS

One profile for doors on two levels! Profile X 8 80x40 2N K15 2T – XMS features two special Line XMS seal grooves and an integrated cable conduit in one neat package.

These features make Profile X 8 80x40 2N K15 2T – XMS the ideal choice when doors need to be installed one above the other in a machine cabin. The strong profile is installed horizontally and fitted with Seals to create a sealed, seamless outer surface. Door Lip Seal T1 - XMS (0.0.649.88) seals the door frame against noise and dust on both levels. The compact cable conduit on the inside offers space for cables and can be sealed with Cover Profile 15 K (0.0.643.81).

Another typical feature of Line XMS is the unbroken exterior that is easy to clean and contributes to the overall look of the machine.

Note: Profile X 8 80x40 2N K15 – XMS (0.0.643.06) is similar in shape but does not include the two seal grooves. As a result, it is ideal for accommodating panel elements. Profile X 8 40x40 1N – XMS (0.0.651.10) does not feature a cable conduit and is used for applications including as a compact door post with two seal grooves.

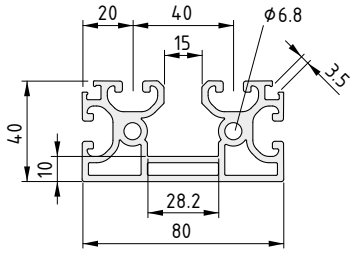

Profile X 8 80x40 2N K15 2T - XMS							Line 8
Al, anodized							
A [cm²]	m [kg/m]	I_x [cm⁴]	I_y [cm⁴]	I_t [cm⁴]	W_x [cm³]	W_y [cm³]	
10.81	2.76	17.81	69.01	4.79	8.21	17.25	
natural, cut-off max. 6000 mm							0.0.686.20
natural, 1 pce., length 6000 mm							0.0.686.21

Work digitally from start to finish – with online tools from item

item MotionDesigner® and item MotionSoft®

item Engineeringtool

item MotionSoft® and item MotionDesigner®

Good just got better! item MotionDesigner® selection and configuration software supports all the new components in the item Automation System, meaning you can start using the new Motors with absolute encoder in your planning right now. item MotionSoft® commissioning software is also set up for the new functions, ensuring the zero point can be precisely defined during set-up.

Both solutions have also benefited from numerous improvements. For example, item MotionDesigner® can now cope with more motion profiles and the range of accessories has been simplified. That means you can track down the perfect item linear motion unit® much more quickly and easily. Linear Units are delivered with Motor and Controller included, as a ready-to-install turnkey system.

What's more, item MotionSoft® can adopt data from item MotionDesigner®, meaning there is often no need for additional programming. Control parameters are also identified independently and the software supports the use of a carriage stop and homing on Proximity Switches.

As item MotionDesigner® is an online tool, the new functions are available automatically and there is no need to perform updates. To ensure you are always working with the latest version of item MotionSoft®, you should always download it again before commissioning a system. The software is available for free at: item24.de/en

www.

item MotionDesigner® can be found here:

motiondesigner.item24.co.uk

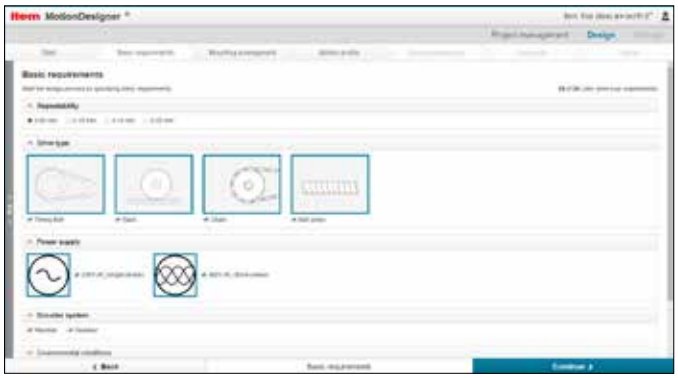

1. More choice

The choice is yours – the powerful item servomotors are now available with an absolute encoder or a resolver for determining position. If you have a technical preference, you can input your choice on the “Basic requirements” page when selecting and configuring your systems. Alternatively, you can leave it to item MotionDesigner® to give you its recommendations during final selection. Both Motor variants are supported by item Controllers and item MotionSoft® commissioning software.

2. More control

item MotionDesigner® offers several solutions for comparison. The software uses your data to establish which combination of Motor, Gearbox, drive, Linear Unit etc. is suited to your project. Besides the details of your recommended equipment, you will also be shown the performance reserve, in case you might want to move a heavier workpiece later on. The comparison now contains more variants, insofar as these are technically viable. You can also print out the details and add them to your documentation.

3. More clarity

Every item linear motion unit® is a one-off. item MotionDesigner® helps you optimise a Linear Unit for your application and your chosen solution can then be delivered to you preconfigured as a ready-to-install turnkey system. However, you can also personalise the features of your Linear Unit very easily. The results page presents compatible accessories, which you can select with the click of your mouse. All the packages are tailored to your Linear Unit, which means you don’t have to search through the catalogue.

4. More convenience

Free item MotionSoft® commissioning software helps you install your item linear motion unit® much faster. Together with the intelligent item Controller, the software independently checks the Linear Unit, finds the optimum controller settings and can adopt the motion profile from item MotionDesigner®. item MotionSoft® is now even easier to use and shows the components that make up your item linear motion unit® on screen, as well as the worksteps that are being carried out. The end result is that commissioning is especially straightforward.

item Engineeringtool

All the product know-how of item in one digital tool! The item Engineeringtool makes it much easier to design constructions because it knows the properties of every single component. Thanks to rules-based placement and error correction, it automatically creates the right connections and selects the right accessories. That – coupled with its ease of use and integrated process management – means you can focus on the real engineering work and achieve optimum results in the shortest possible space of time.

The Engineeringtool provides end-to-end support for design and configuration tasks. Due to the intuitive nature of the software, it takes next to no time to familiarise yourself with the environment, so you can get straight down to work. The Engineeringtool has access to a database that contains all the profiles in the MB Building Kit System, as well as the corresponding fasteners, floor elements and Caps. Intelligent calculation tools and customisable filters help you select and combine individual components for the perfect result.

The item Engineeringtool combines state-of-the-art 3D engineering with a digital process chain that includes documentation. The software features a user-friendly engineering module where profiles can be easily connected together to create entire frames. The tool ensures that connections fit and fasteners are correctly placed.

You will find all the information you need in one place and the software is available for free online. Thanks to the personal project memory, you can access all your information whenever you like and wherever you are by going to item.engineering/tools/engineeringtool

Once you have designed your solution, the Engineeringtool compiles all the necessary drawings, installation guides and project documentation. You can also place orders directly online.

www.

The item Engineeringtool can be found here:
item.engineering/tools/engineeringtool

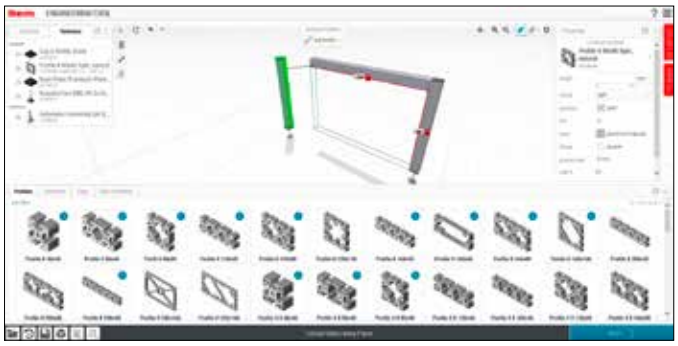

1. Always the perfect profile

item offers around 200 profile variants for all purposes, and the Engineering-tool makes it easy to pick out the perfect product. Smart filters ensure that only profiles that meet your requirements are shown and you can search for parts by product line, properties or load requirements. As all the profiles that meet your criteria are displayed, you also have a clear overview in front of your eyes. Engineering tasks are completed onscreen in 3D.

2. Always the right accessories

Since the item Engineeringtool knows the profiles and their properties, it always brings up matching accessories. That means you don't need to go searching in the catalogue for the right Cap or Castor. Instead, all you have to do is drag and drop accessories from the menu to the relevant profile – the intelligent software automatically selects the correct variant. The whole process works faster than any CAD system because the item Engineeringtool takes care of all the details, so you don't have to.

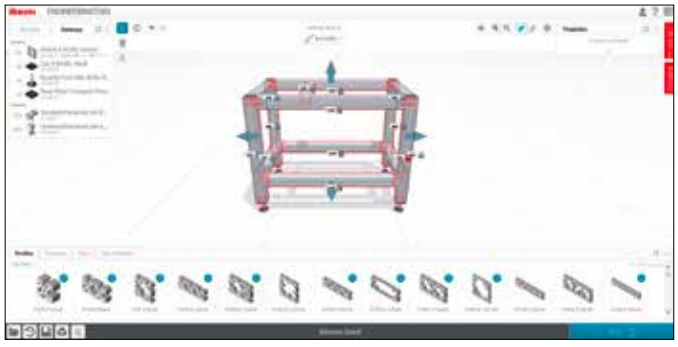

3. Always easily adjustable

You can position and connect individual profiles. The easy-to-use item Engineer-ingtool shows connection points and treats constructions as a collective entity. To change the width or adjust the height, simply double-click to select the entire construction – everything can be extended or shortened collectively in three dimensions. All the affected components are automatically modified. Naturally, all the fasteners and accessories are moved to the right places, too. It's all possible thanks to rules-based engineering.

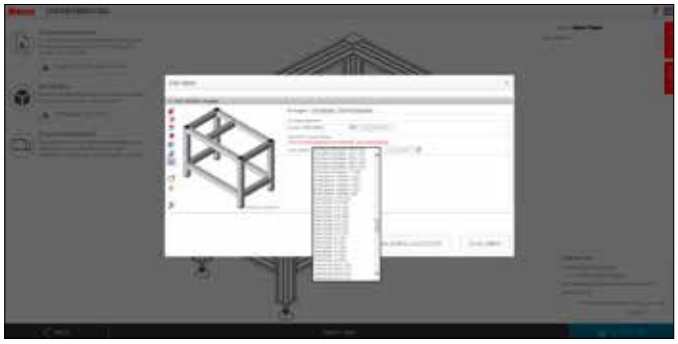

4. Always ideally connected

The item Engineeringtool helps you design complete frames and machine structures. In most cases, there is no need for separate CAD software, although sometimes you may want to reuse constructions in a complex project. No prob-lem! The Engineeringtool has mastered the data formats of all key CAD systems so you can export your project as a precise 3D object and start working on it straight away.

5. Always documented to requirements

The Engineeringtool generates project documentation in the desired level of detail as and when required. Whether bills of material, isometric views or a complete installation guide – you can access all the information you need at the touch of a button. That is possible because the item Engineeringtool really knows the components and doesn't treat them as just any old 3D objects. The end result is that you know how many fasteners are being used, where they are being fitted and what machining is required.

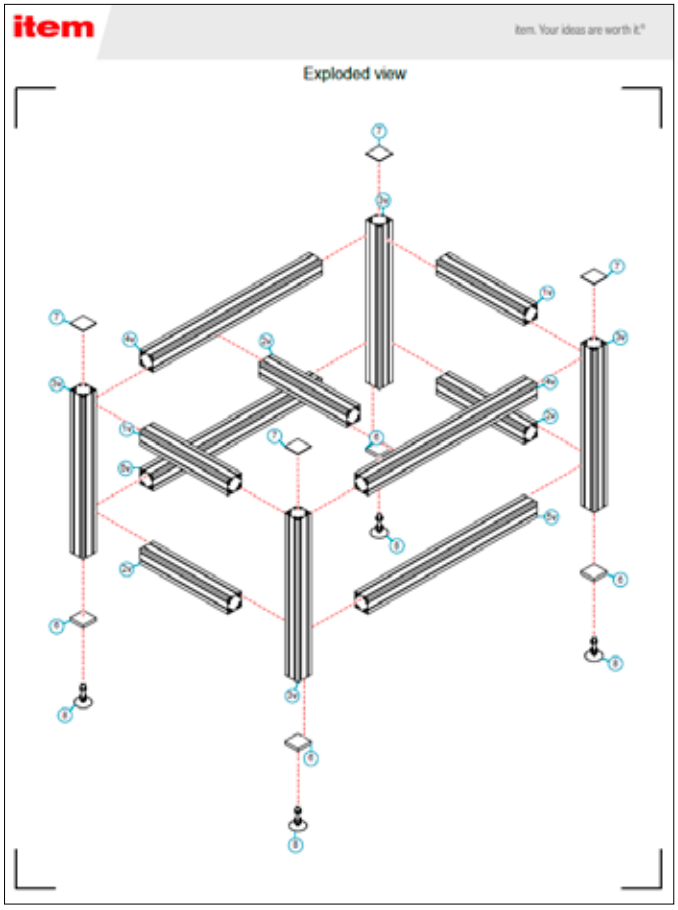

6. Always get results – fast

The Engineeringtool always treats your construction as a project. At the click of your mouse, you can transfer that project to a cart in the item Online Shop, which means you get a price faster. After placing an order, you won't have to wait long until all the components you need to assemble your frame arrive. The detailed installation guide will take you through the assembly process step by step.

Note: Each project is supplied as a complete kit, including profile machining, so you can get started straight away. That saves time and money!

Other item product catalogues

Work Bench System

item24.de/en/epaper-wbs

Automation System

item24.de/en/epaper-au

Line XMS

item24.de/en/epaper-xm

Lean Production Building Kit System

item24.de/en/epaper-lp

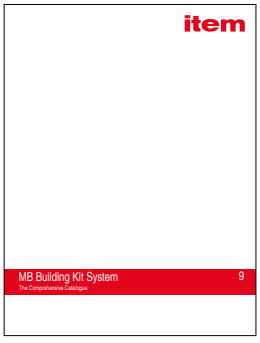

MB Building Kit System

item24.de/en/epaper-mb

Stairway/Platform System

item24.de/en/epaper-tp

All the information you need at your fingertips

item product catalogues are available online as clearly laid out and convenient e-papers. Take your pick and get browsing!

Stay in the loop, even when you're offline.

Detailed planning without the Internet: item ikasys catalogue software provides all the product information you need, including installation guides and CAD data, on a DVD. Simply order a copy or download it yourself at item24.de/en

Your head-start for know-how – the item online portfolio

Service and information around the clock – item24.com

item is always there for you! You can find all the product information you could need on the item website – including CAD data. You will also discover the very latest news and a whole range of example applications. Complete parts lists and 3D PDFs provide the ideal basis for your own planning. What's more, you can access an entire media library, discover service offerings and get in touch with item – all at the click of a mouse.

item24.com

Plan fast and make the right decisions – the item online tools

You can count on us! The item Online Product Configurators and online tools such as the Deflection Calculator for profiles will save you a lot of time. State-of-the art planning aids for work benches and SystemMobiles make it much easier for you to configure the perfect bespoke solution. When it comes to automation, you can track down the ideal Linear Unit using item MotionDesigner®. And the Query Assistant is ideal for helping you plan stairways and platforms with ease.

item24.de/en/service/online-product-configurators

See how it's done – with item on YouTube

They say a picture is worth more than 1000 words. So – at 25 images per second – you can imagine just how informative the item videos are. You can find assembly tips and useful information, all packaged up in moving images, on YouTube. Specialists also answer frequently asked questions relating to issues such as ergonomics and lean production. Tune in to the item channel and make the most of our comprehensive catalogue of videos.

youtube.com/item24com

Alphabetical Register

A

Angle Fasteners 10

C

Caps 6, grey 8

D

Data Cables AKSC 27

I

I/O Cable (C Series) 30
I/O Interface Module (C Series) 30
item Engineeringtool 40
item MotionDesigner® 38
item MotionSoft® 38

M

Motors SE AK 27

P

Profile 8 320x40 I 16
Profile X 8 80x40 2N K15 2T– XMS 36
Protective Profile 8 40x16 ESD 14
Proximity Switch Sets 31

R

Roller D30/D6-16 T1 23
Roller Set 8 D30-30 T1 23

S

Screw Anchor ST 12
Slide Stop LRE 8 34
Slide Strips D30 21

T

Table Column Set 4 80x40 H 18
Table Column Set 4 D40 H 24
T-Slot Slider 8 for Corner-Fastener 8 32x18 6

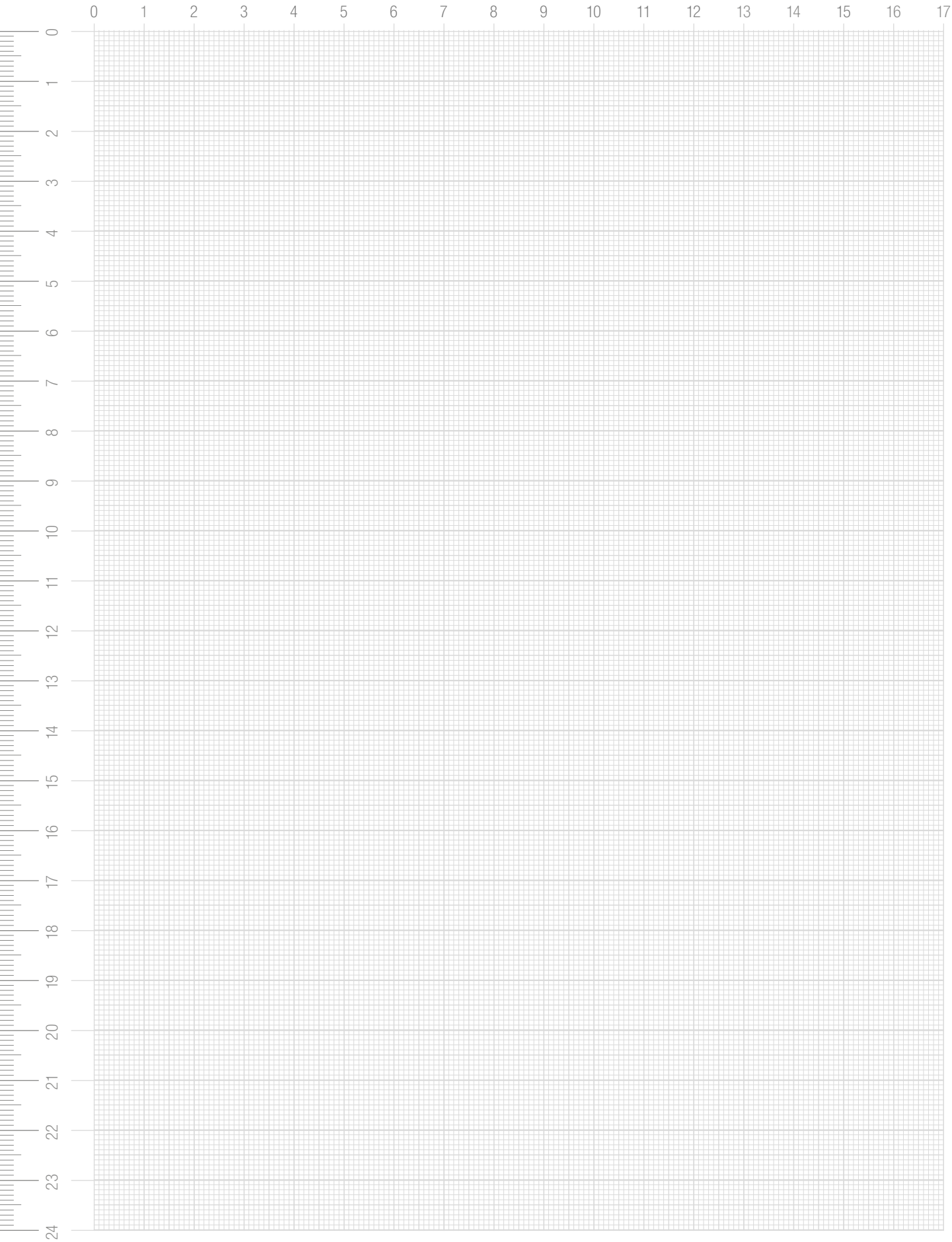
0 1 2 3 4 5 6 7 8 9 10 11 12 13 14 15 16 17
0 1 2 3 4 5 6 7 8 9 10 11 12 13 14 15 16 17 18 19 20 21 22 23 24

Patents
Any copying of protected products is a violation of these rights and, as such, shall be liable to compensation. Data and illustrations in this catalogue do not discharge the user from the obligation to carry out his own checks to determine whether the industrial property rights of third parties are infringed.

Product liability
item shall be liable, within the framework of the applicable legal provisions, for the promised characteristics of the products shown in this catalogue. Any claims for liability above and beyond such – in particular relating to products created by third parties using products included in this catalogue – are expressly excluded.

Conditions of use
The products in the item building kit systems are suitable for use in dry conditions and over the temperature range -20 °C to +70 °C, unless otherwise indicated. item must be consulted where products are to be used for applications outside these limits.

Conformity with Directive 2011/65/EU (“RoHS”)
item has made a voluntary undertaking to refrain from using hazardous substances as defined in Directive 2011/65/EU in the products it sells, irrespective of their subsequent purpose which, in the majority of cases, does not fall under this Directive.

Concept, design and realisation
item Industrietechnik GmbH

Photographs
item Industrietechnik GmbH

Technical modifications and errors reserved.
All rights reserved. Use of texts and illustrations or reprints of any kind only permitted with prior written consent from item. This applies in particular to reproduction, translation or use in electronic systems.

item and the item claim are a registered trademark of item Industrietechnik GmbH.

© item Industrietechnik GmbH 2018

WWW.

Always there for you.

Always up to date: Our website at item24.com offers further information on all the products and technologies that item supplies.

0.4.124.49 04/2018 © item Industrietechnik GmbH Made in Germany

Your distribution and service partner

item

Your ideas are worth it.®

item Industrietechnik GmbH
Friedenstrasse 107-109
42699 Solingen
Germany

Telephone +49 212 6580 0
Fax +49 212 6580 310

info@item24.com
item24.com