AluFlexGroup

YOUR PARTNER IN AUTOMATION SOLUTIONS

AluFlex AB | item profiili oy | LinearModul A/S | AluFlex System AS

BELT CONVEYORS

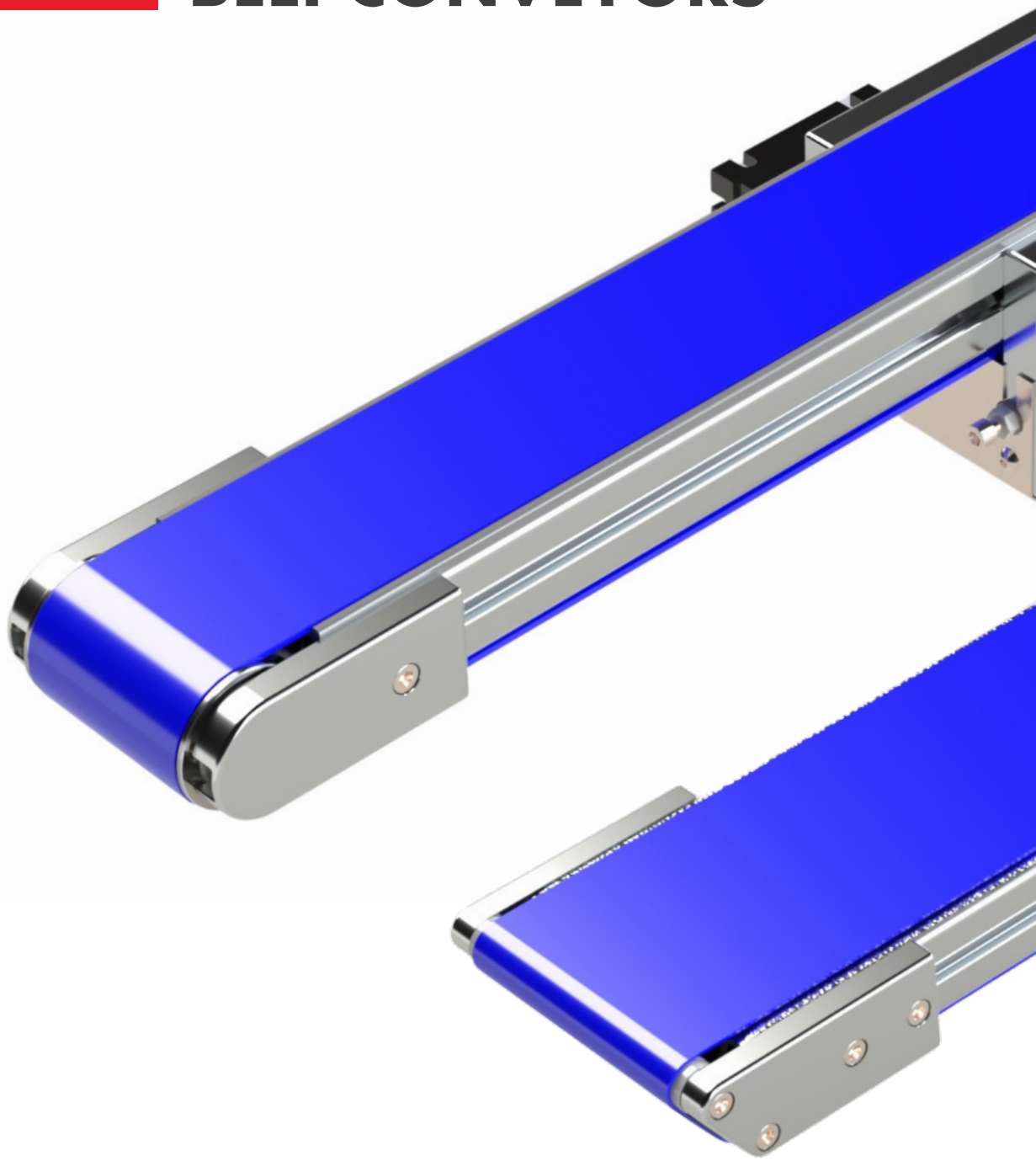

www.aluflex.com



Aluflex Group operates throughout the Nordic region, delivering automation solutions to the Scandinavian market.

We collaborate with the industry's leading suppliers of automation products. Our extensive product range includes item aluminum profile systems, belt conveyors, roller conveyors, modular and chain conveyors, pallet conveyors, and workstation systems. Additionally, we offer linear motion products such as linear guides, ball screws, linear modules, telescopic movements, and rack-and-pinion solutions.

From our workshop and large warehouse in Helsingborg, we provide customized engineering solutions and optimized logistics. We have the capability to cut, process, and assemble quickly according to your specific requirements. To facilitate design work, CAD and PDF-files are available on our website.

Aluflex turns ideas into complete solutions!

Index

page

Products

Product presentation 4
Matrix 4
Flat Belt Conveyor 40 - End Drive 6
40 - End Drive Motor Below 8
40 - Central Drive 10
40 - Double End Drive 12
40 - Double Central Drive 14
Timing Belt Conveyor 40 - End Drive 16
40 - End Drive Motor Below 18
40 - Central Drive 20
40 - Double End Drive 22
40 - Double Central Drive 24
Flat Belt Conveyor 40 - Knife Edge 26

Modular, Ready-to-Use Conveyor Solutions.

Our Belt Conveyors arrive fully assembled, ready to integrate with your machinery, and easily adaptable thanks to our modular aluminium profile system. Quick to extend, modify, and combine, they offer flexibility for efficient and cost-effective transport. Designed for production and logistics, they handle goods of all sizes across industries. We also provide a full range of spare parts to keep your operations running smoothly.

Modular System

Our belt conveyors feature a modular, highly standardized design for easy customization to your exact requirements.

With varied configurations and accessories, we deliver tailored, cost-efficient solutions.

Operational endurance

Built with premium materials and precision manufacturing, our conveyors deliver durable, reliable performance for long-term operational efficiency and productivity.

Fast and reliable delivery

Our streamlined logistics ensure fast, reliable delivery to keep your operations running without interruption. We prioritize precision in every shipment.

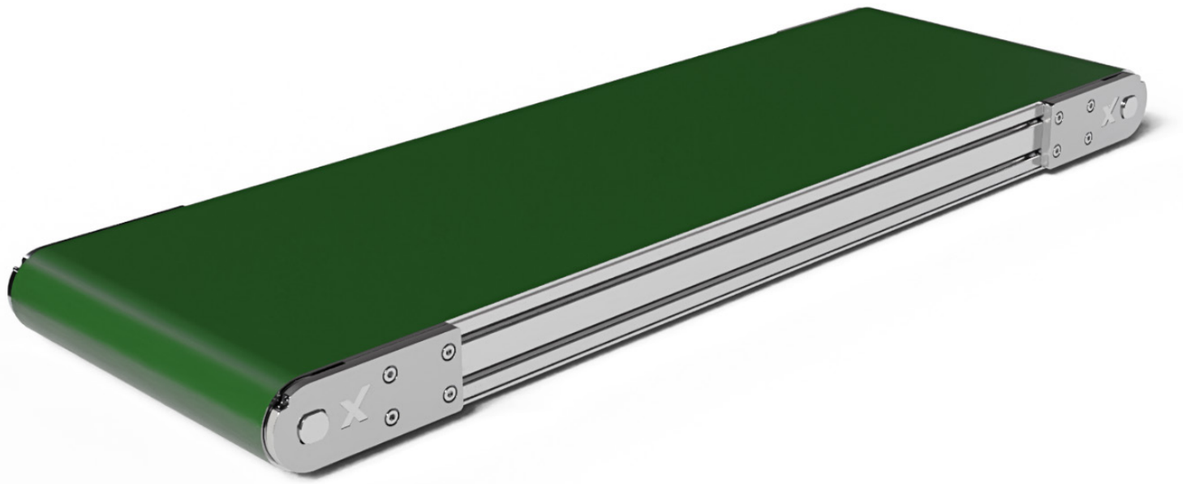

Specifications and features of our Conveyor Models

	Mini Conveyor	Flat Belt Conveyor 20	Flat Belt Conveyor 40	Timing Belt Conveyor 40	Flat Belt Conveyor 40 Inclined	Flat Belt Conveyor 80	Flat Belt Conveyor 80 Drum motor	Timing Belt Conveyor 90
		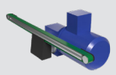	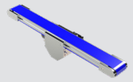	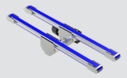	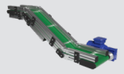	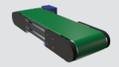	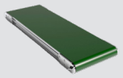	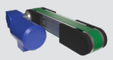
Series	Mini Conveyor	Flat Belt Conveyor 20	Flat Belt Conveyor 40	Timing Belt Conveyor 40	Flat Belt Conveyor 40 Inclined	Flat Belt Conveyor 80	Flat Belt Conveyor 80 Drum motor	Timing Belt Conveyor 90
Drive design	Single belt	Single belt	Single/Dual/ Multiple belts	Single/Dual/ Multiple belts	Single belt	Single belt	Single belt	Single/Dual/ Multiple belts
Conveyor width	80-200 mm	20-160 mm	40-500 mm	40-80 mm	200-400 mm	160-1500 mm	500-1200 mm	40-120 mm
Conveyor length	370-2000 mm	200-3000 mm	400-6000 mm	400-6000 mm	600-4000 mm	400-6000 mm	600-4000 mm	400-6000 mm
Drive type	Internal drive	Central drive	End/Central/ Motor below drive	End/Central/ Motor below drive	End drive	End drive	End drive	End drive
Drive power	Maxxon motor 11-60W	Asynchronous motor 0,09kW-0,25kW	Asynchronous motor 0,09kW-0,25kW	Asynchronous motor 0,09kW-0,25kW	Asynchronous motor 0,18kW	Asynchronous motor 0,18kW-0,37kW	Asynchronous motor 230/400V, 50Hz	Asynchronous motor 0,18kW-0,37kW or Servo
Power Supply	24 VDC	230/400V, 50Hz	230/400V, 50Hz	230/400V, 50Hz	230/400V, 50Hz	230/400V, 50Hz	230/400V, 50Hz	230/400V, 50Hz
Conveying speed	0,2-18 m/min	2-37 m/min	2-37 m/min	2-37 m/min	2-37 m/min	2-37 m/min	11,4-63m/min	4-240 m/min
Max load conveying	10 kg	40 kg	100 kg	100 kg	8 kg	200 kg	200 kg	400 kg
Knife edge	No	No	Yes	No	No	No	No	No

- All data depends on length, width, belt type and speed.
- 10 starts/stops per hour.

Flat Belt Conveyor 40 - End Drive

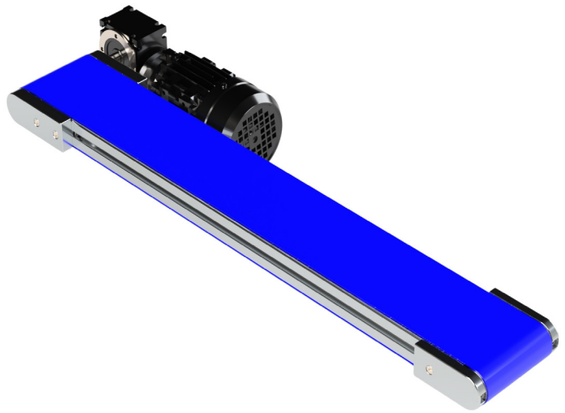

Speed
0 - 37 m/min

Load
0 - 100 kg

Length
400 - 6000 mm

Width
40, 80, 120, 160, 200, 250, 300, 400, 500 mm

General technical data	
Conveyor width (A)	40, 80, 120, 160, 200, 250, 300, 400, 500
Belt width	A - 10
Lenght (L)	400 - 6000 mm
Load	0 - 100 kg
Speed	0 - 37 m/min
Pulley diamater	44 mm
Knife edge	Possible accessory
Belt type	Wide assortment available upon request
Plate under belt	Aluzinc std/ Stainless steel

Motor technical data	
Motor	Asynchronous 230/400V, 50Hz
Cable	Delivered without motor cable
Protection rate motor	IP69K
Ambient temperature	- 20 to +40 °C
Gear speed	2,3/3,1/3,7/4,6/6,2/7,4/9,2/12/18,5 /24/37 m/min

Motor position

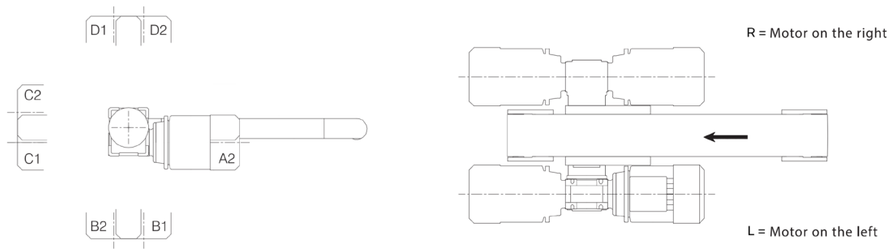

Top View

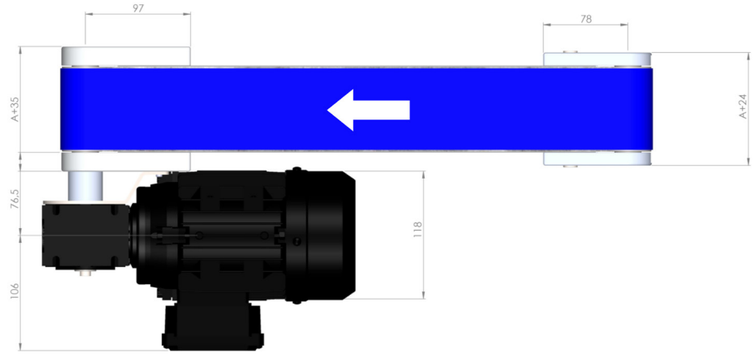

Side View

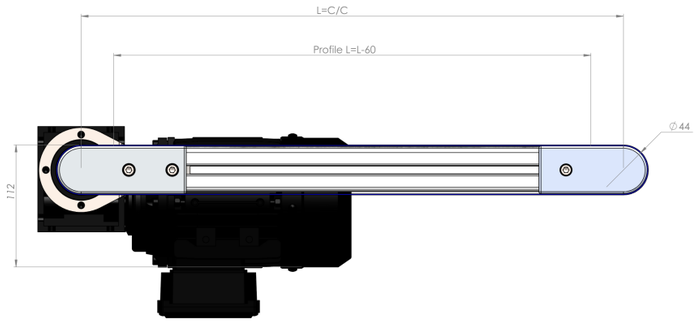

Front View

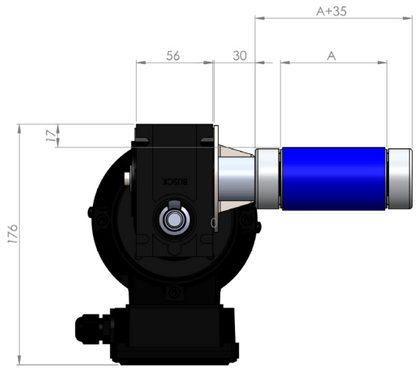

Flat Belt Conveyor 40 - End Drive Motor Below

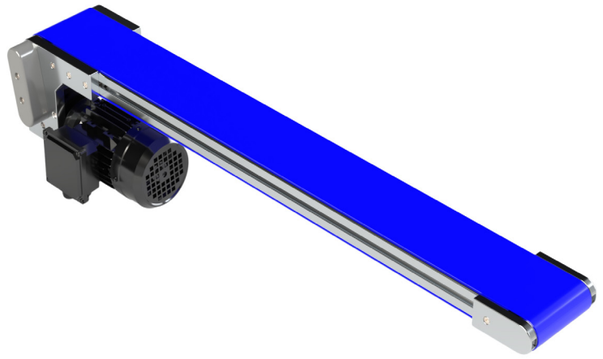

Speed
0 - 37 m/min

Load
0 - 100 kg

Length
400 - 6000 mm

Width
40, 80, 120, 160, 200, 250, 300, 400, 500 mm

General technical data	
Conveyor width (A)	40, 80, 120, 160, 200, 250, 300, 400, 500
Belt width	A - 10
Lenght (L)	400 - 6000 mm
Load	0 - 100 kg
Speed	0 - 37 m/min
Pulley diamater	44 mm
Knife edge	Possible accessory
Belt type	Wide assortment available upon request
Plate under belt	Aluzinc std / stainless steel

Motor technical data	
Motor	Asynchronous 230/400V, 50Hz
Cable	Delivered without motor cable
Protection rate motor	IP69K
Ambient temperature	- 20 to +40 °C
Gear speed	2,3/3,1/3,7/4,6/6,2/7,4/9,2/12/18,5 /24/37 m/min

Motor position

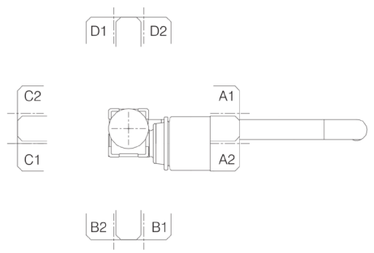

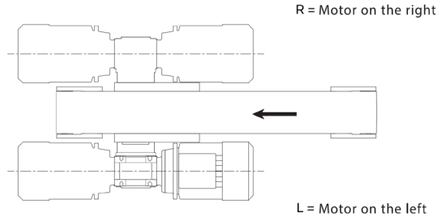

R = Motor on the right

L = Motor on the left

Top View

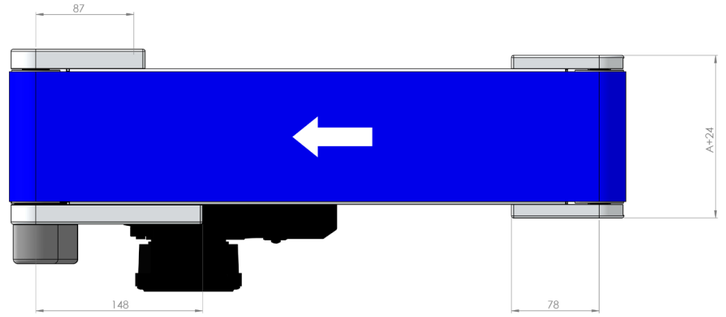

Side View

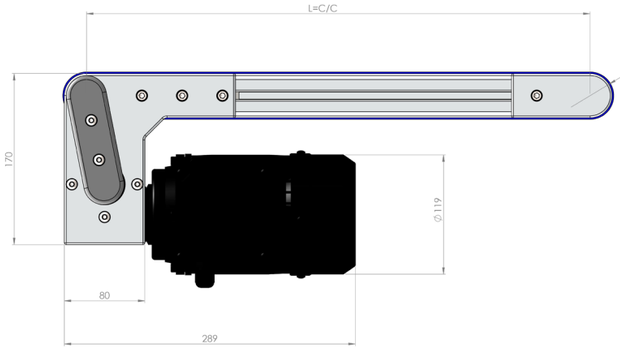

Front View

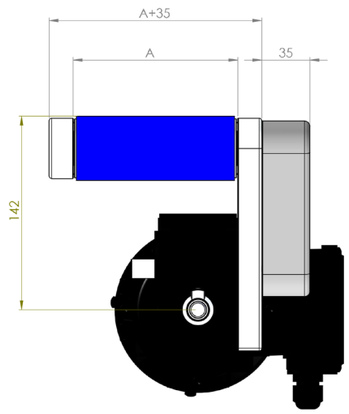

Flat Belt Conveyor 40 - Central Drive

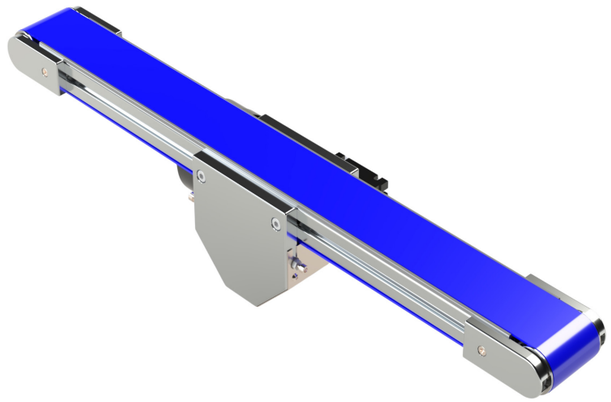

Speed
0 - 37 m/min

Load
0 - 100 kg

Length
400 - 6000 mm

Width
40, 80, 120, 160, 200, 250, 300, 400, 500 mm

General technical data	
Conveyor width (A)	40, 80, 120, 160, 200, 250, 300, 400, 500
Belt width	A - 10
Lenght (L)	400 - 6000 mm
Lenght (L1)	Central motor position C/C standard
Load	0 - 100 kg
Speed	0 - 37 m/min
Pulley diamater	44 mm
Knife edge	Possible accessory
Belt type	Wide assortment available upon request
Plate under belt	Aluzinc std/ stainless steel

Motor technical data	
Motor	Asynchronous 230/400V, 50Hz
Cable	Delivered without motor cable
Protection rate motor	IP69K
Ambient temperature	- 20 to +40 °C
Gear speed	2,3/3,1/3,7/4,6/6,2/7,4/9,2/12/18,5 /24/37 m/min

Motor position

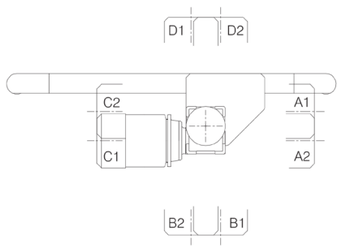

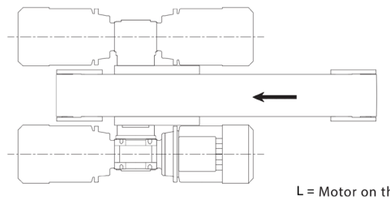

R = Motor on the right

L = Motor on the left

Top View

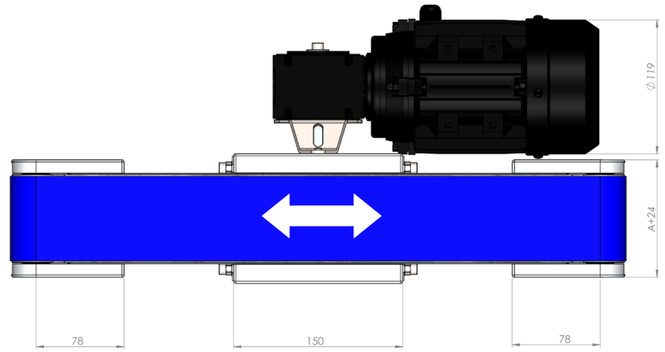

Side View

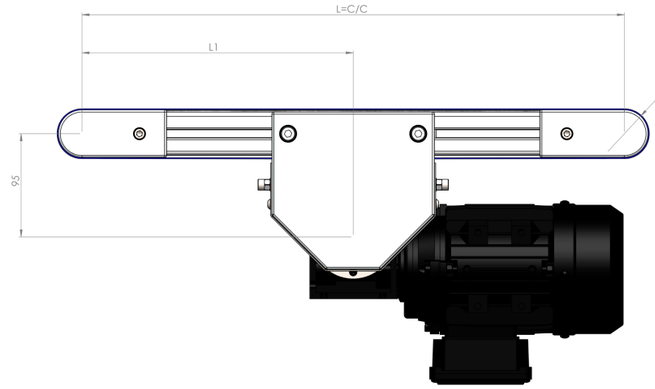

Front View

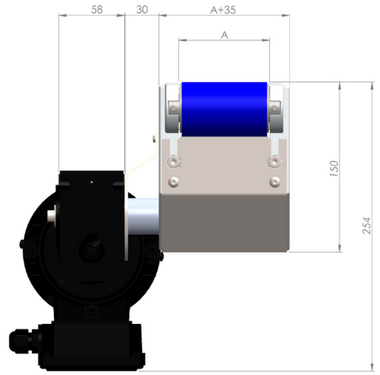

Flat Belt Conveyor 40 - Double End Drive

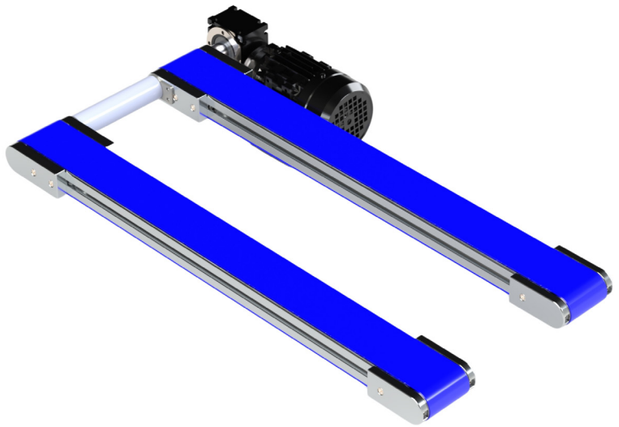

Speed
0 - 37 m/min

Load
0 - 100 kg

Length
400 - 6000 mm

Width
40, 80 mm

General technical data	
Conveyor width (A)	40, 80
Belt width	A - 10
Lenght (L)	400 - 6000 mm
Distance (E)	140 - 2000 mm
Load	0 - 100 kg
Speed	0 - 37 m/min
Pulley diamater	44 mm
Knife edge	Possible accessory
Belt type	Wide assortment available upon request
Plate under belt	Aluzinc std / stainless steel

Motor technical data	
Motor	Asynchronous 230/400V, 50Hz
Cable	Delivered without motor cable
Protection rate motor	IP69K
Ambient temperature	- 20 to +40 °C
Gear speed	2,3/3,1/3,7/4,6/6,2/7,4/9,2/12/18,5 /24/37 m/min

Motor position

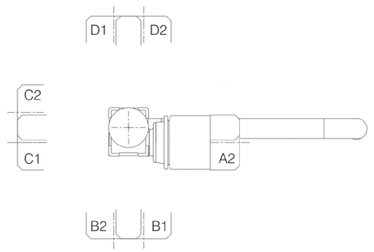

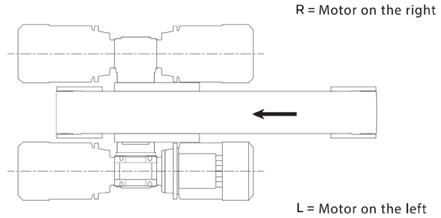

Top View

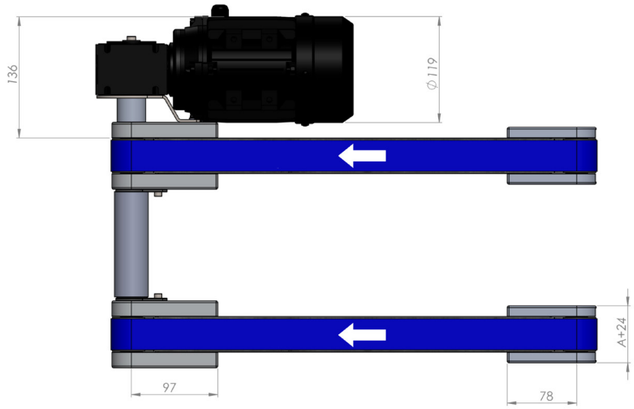

Side View

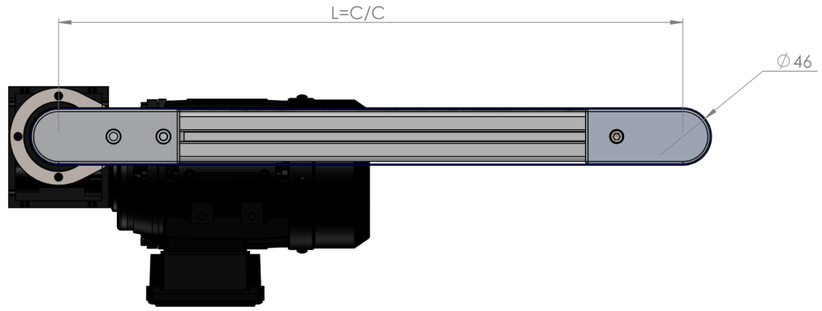

Front View

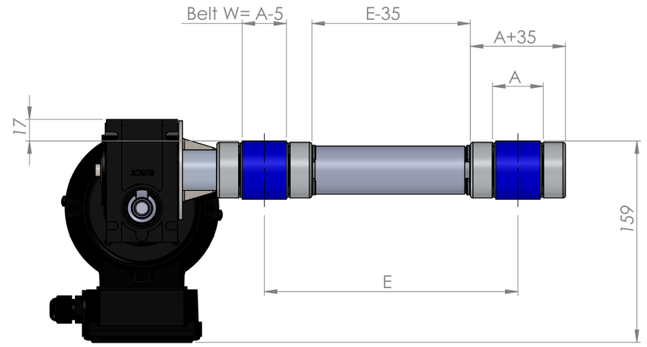

Flat Belt Conveyor 40 - Double Central Drive

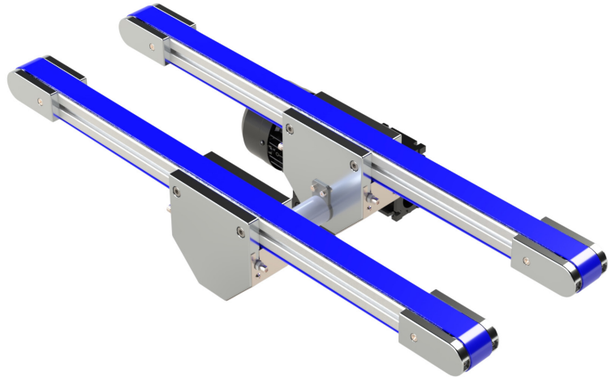

Speed
0 - 37 m/min

Load
0 - 100 kg

Length
400 - 6000 mm

Width
40, 80 mm

General technical data	
Conveyor width (A)	40, 80
Belt width	A - 10
Lenght (L)	400 - 6000 mm
Lenght (L1)	Central motor position C/C standard
Distance (E)	140 - 2000 mm
Load	0 - 100 kg
Speed	0 - 37 m/min
Pulley diamater	44 mm
Knife edge	Possible accessory
Belt type	Wide assortment available upon request
Plate under belt	Aluzinc std / stainless steel

Motor technical data	
Motor	Asynchronous 230/400V, 50Hz
Cable	Delivered without motor cable
Protection rate motor	IP69K
Ambient temperature	- 20 to +40 °C
Gear speed	2,3/3,1/3,7/4,6/6,2/7,4/9,2/12/18,5 /24/37 m/min

Motor position

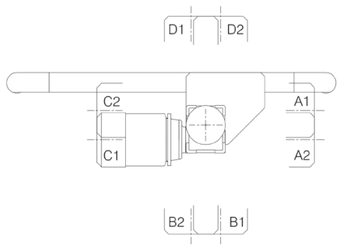

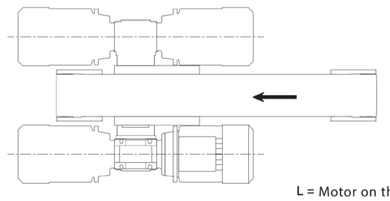

R = Motor on the right

L = Motor on the left

Top View

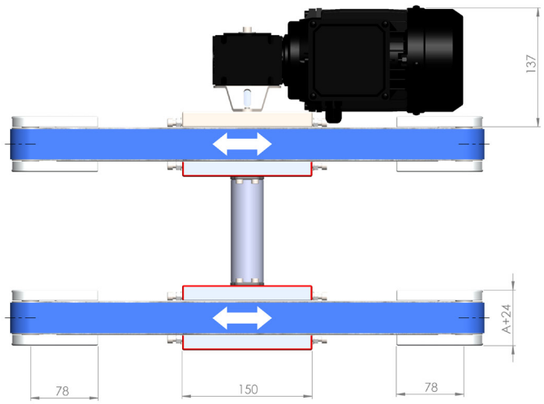

Side View

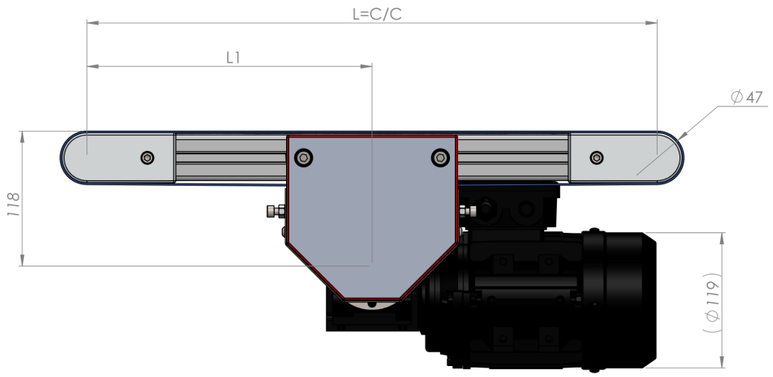

Front View

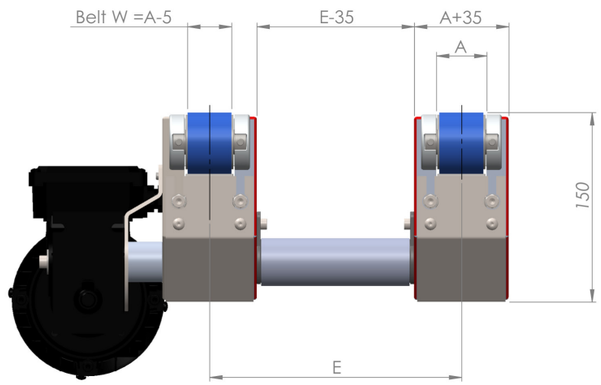

Timing Belt Conveyor 40 - End Drive

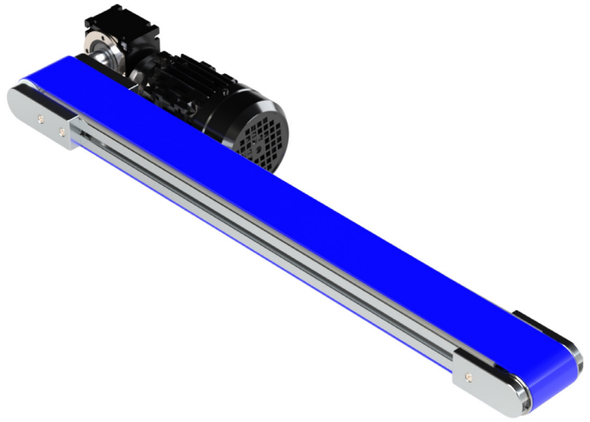

Speed
0 - 37 m/min

Load
0 - 100 kg

Length
400 - 6000 mm

Width
40, 80 mm

General technical data	
Conveyor width (A)	40, 80 mm
Belt width	32, 72 mm
Lenght (L)	400 - 6000 mm
Lenght (L1)	Central motor position C/C standard
Load	0 - 100 kg
Speed	0 - 37 m/min
Pulley diamater	51 mm
Knife edge	Not applicable
Belt type	T5 Timing belt
Plate under belt	PE-UHMW Black

Motor technical data	
Motor	Asynchronous 230/400V, 50Hz
Cable	Delivered without motor cable
Protection rate motor	IP69K
Ambient temperature	- 20 to +40 °C
Gear speed	2,3/3,1/3,7/4,6/6,2/7,4/9,2/12/18,5 /24/37 m/min

Motor position

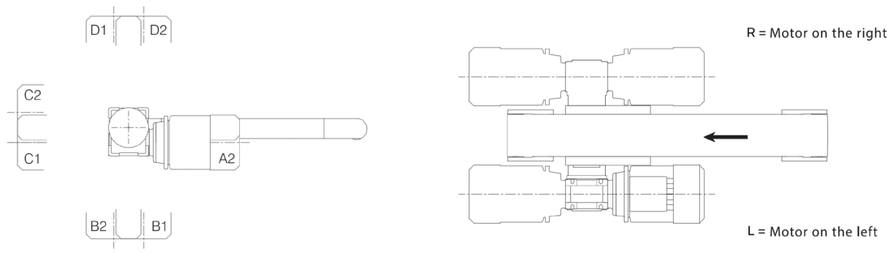

Top View

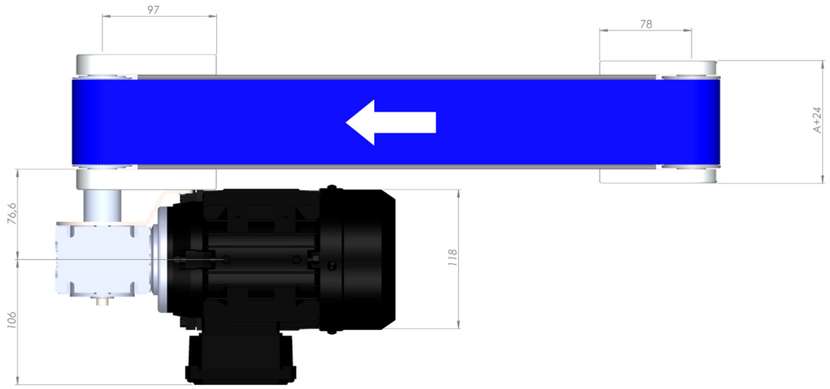

Side View

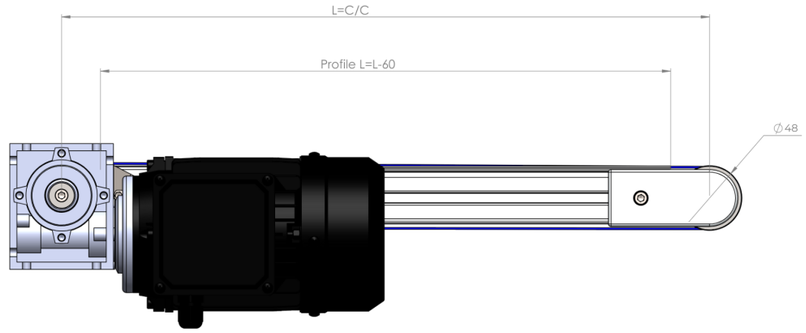

Front View

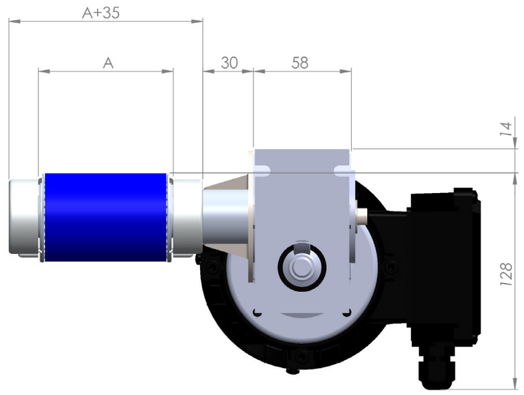

Timing Belt Conveyor 40 - End Drive Motor Below

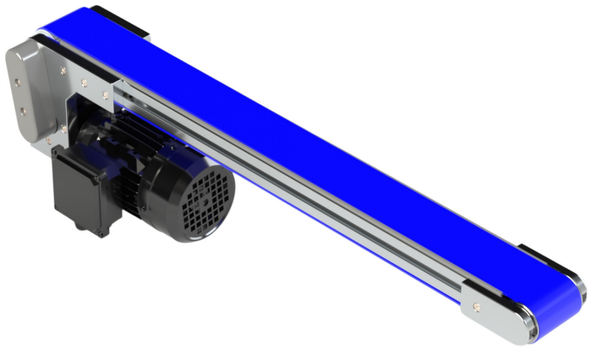

Speed
0 - 37 m/min

Load
0 - 100 kg

Length
400 - 6000 mm

Width
40, 80 mm

General technical data	
Conveyor width (A)	40, 80 mm
Belt width	32, 72 mm
Lenght (L)	400 - 6000 mm
Lenght (L1)	Central motor position C/C standard
Load	0 - 100 kg
Speed	0 - 37 m/min
Pulley diamater	51 mm
Knife edge	Not applicable
Belt type	T5 Timing belt
Plate under belt	PE-UHMW Black
Motor technical data	
Motor	Asynchronous 230/400V, 50Hz
Cable	Delivered without motor cable
Protection rate motor	IP69K
Ambient temperature	- 20 to +40 °C
Gear speed	2,3/3,1/3,7/4,6/6,2/7,4/9,2/12/18,5 /24/37 m/min

Motor position

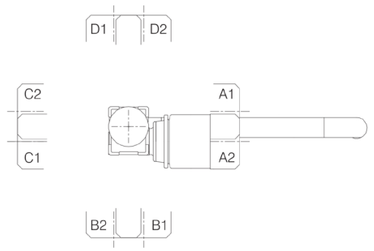

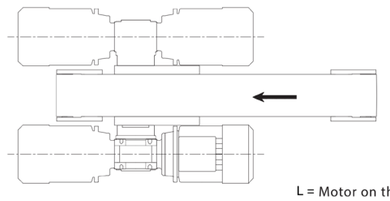

R = Motor on the right

L = Motor on the left

Top View

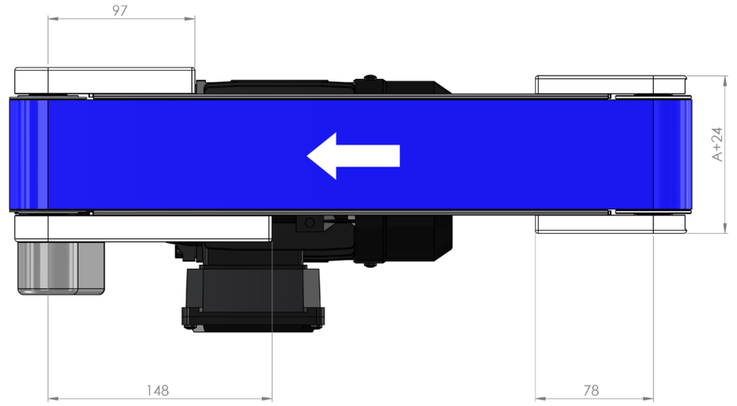

Side View

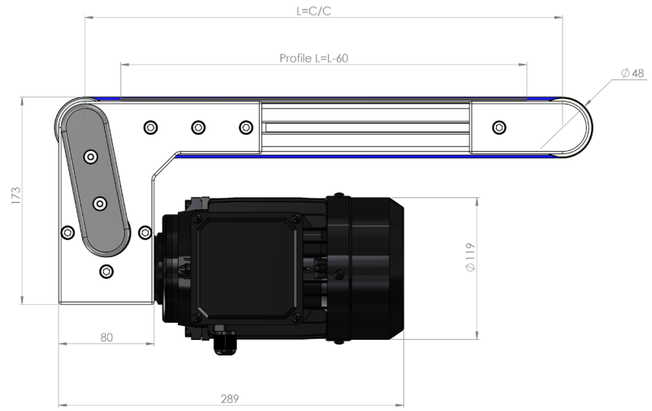

Front View

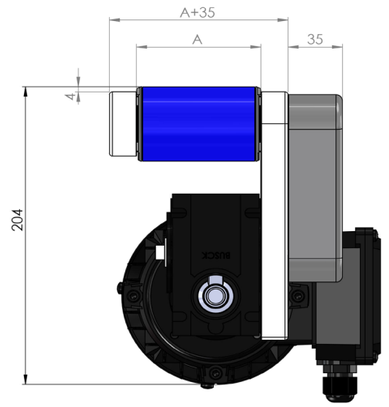

Timing Belt Conveyor 40 - Central Drive

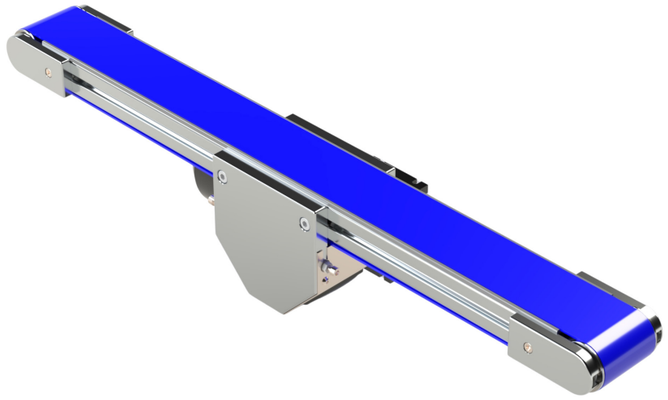

Speed
0 - 37 m/min

Load
0 - 100 kg

Length
400 - 6000 mm

Width
40, 80 mm

General technical data	
Conveyor width (A)	40, 80
Belt width	32, 72 mm
Lenght (L)	400 - 6000 mm
Lenght (L1)	Central motor position C/C standard
Load	0 - 100 kg
Speed	0 - 37 m/min
Pulley diamater	51 mm
Knife edge	Not applicable
Belt type	T5 Timing belt
Plate under belt	Aluzinc std / stainless steel

Motor technical data	
Motor	Asynchronous 230/400V, 50Hz
Cable	Delivered without motor cable
Protection rate motor	IP69K
Ambient temperature	- 20 to +40 °C
Gear speed	2,3/3,1/3,7/4,6/6,2/7,4/9,2/12/18,5 /24/37 m/min

Motor position

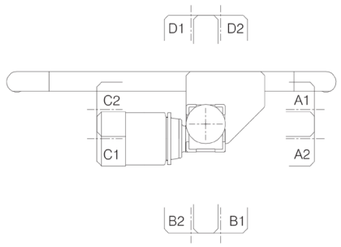

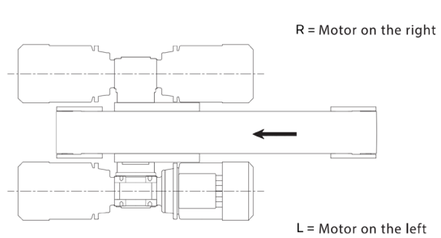

Top View

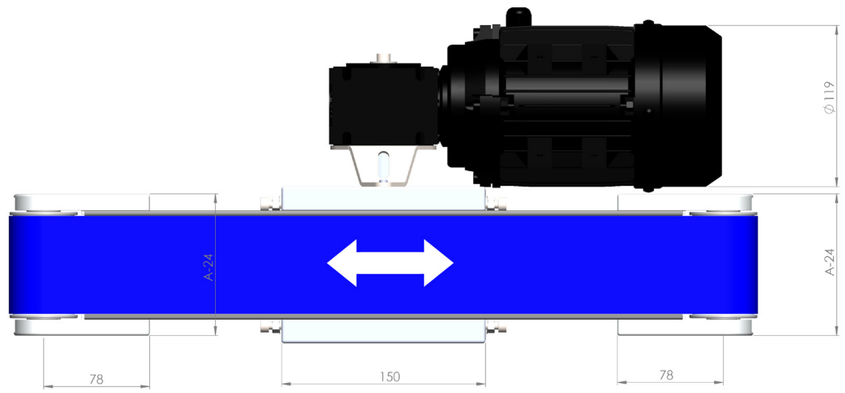

Side View

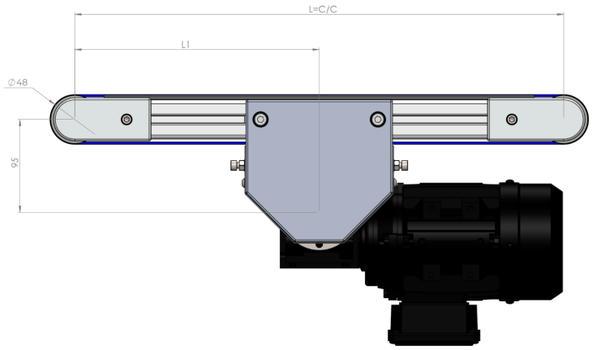

Front View

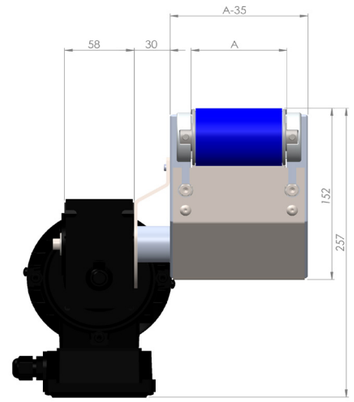

Timing Belt Conveyor 40 - Double End Drive

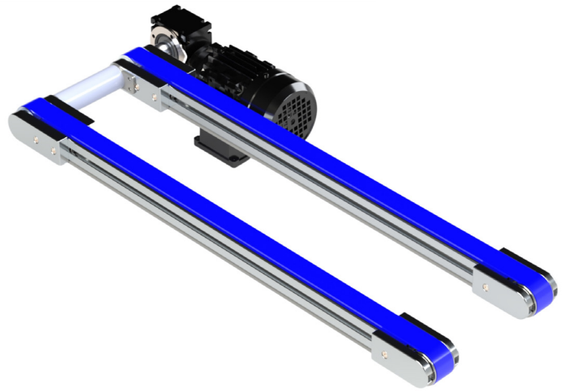

Speed
0 - 37 m/min

Load
0 - 100 kg

Length
400 - 6000 mm

Width
40, 80 mm

General technical data	
Conveyor width (A)	40, 80 mm
Belt width	32, 72 mm
Lenght (L)	400 - 6000 mm
Lenght (L1)	Central motor position C/C standard
Distance (E)	140 - 2000 mm
Load	0 - 100 kg
Speed	0 - 37 m/min
Pulley diamater	51 mm
Knife edge	Not applicable
Belt type	T5 Timing belt
Plate under belt	PE-UHMW Black

Motor technical data	
Motor	Asynchronous 230/400V, 50Hz
Cable	Delivered without motor cable
Protection rate motor	IP69K
Ambient temperature	- 20 to +40 °C
Gear speed	2,3/3,1/3,7/4,6/6,2/7,4/9,2/12/18,5 /24/37 m/min

Motor position

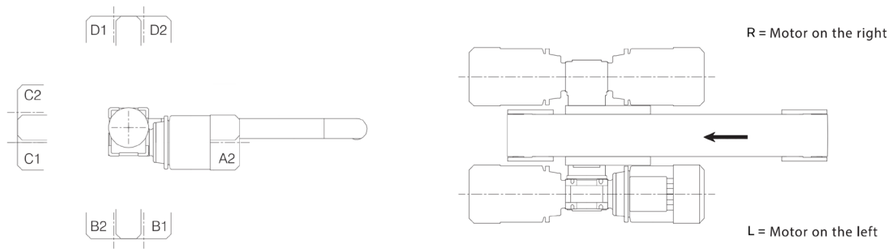

Top View

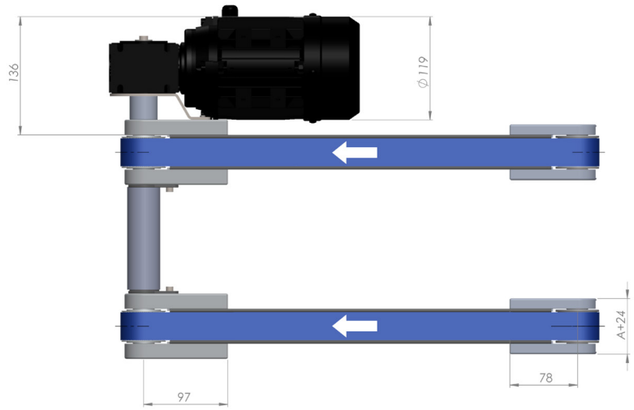

Side View

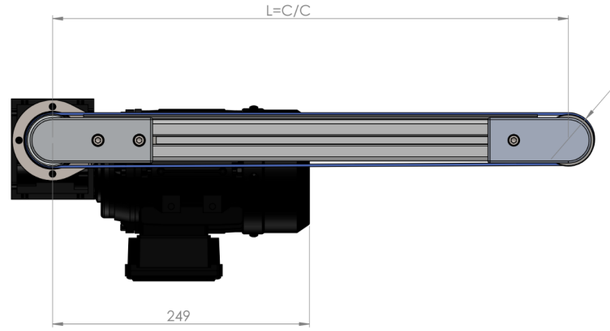

Front View

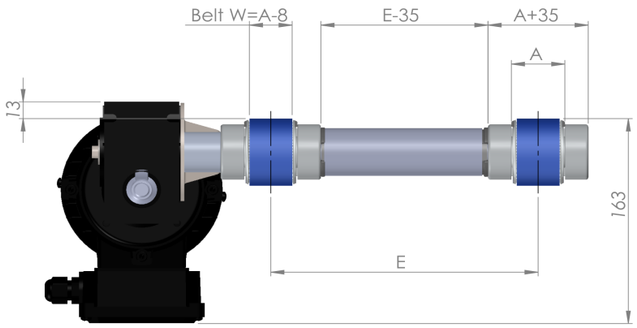

Timing Belt Conveyor 40 - Double Central Drive

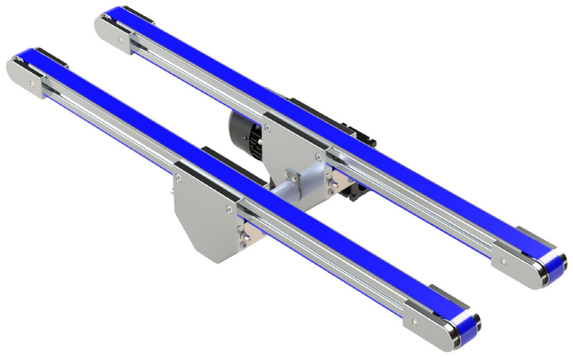

Speed
0 - 37 m/min

Load
0 - 100 kg

Length
400 - 6000 mm

Width
40, 80 mm

General technical data	
Conveyor width (A)	40, 80 mm
Belt width	32, 72 mm
Lenght (L)	400 - 6000 mm
Lenght (L1)	Central motor position C/C standard
Distance (E)	140 - 2000 mm
Load	0 - 100 kg
Speed	0 - 37 m/min
Pulley diamater	51 mm
Knife edge	Not applicable
Belt type	T5 Timing belt
Plate under belt	PE-UHMW Black

Motor technical data	
Motor	Asynchronous 230/400V, 50Hz
Cable	Delivered without motor cable
Protection rate motor	IP69K
Ambient temperature	- 20 to +40 °C
Gear speed	2,3/3,1/3,7/4,6/6,2/7,4/9,2/12/18,5 /24/37 m/min

Motor position

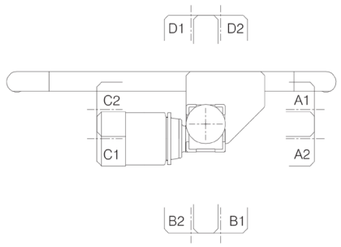

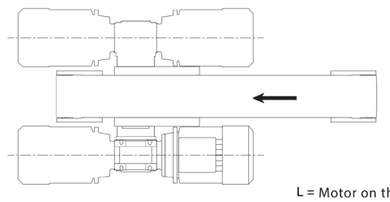

R = Motor on the right

L = Motor on the left

Top View

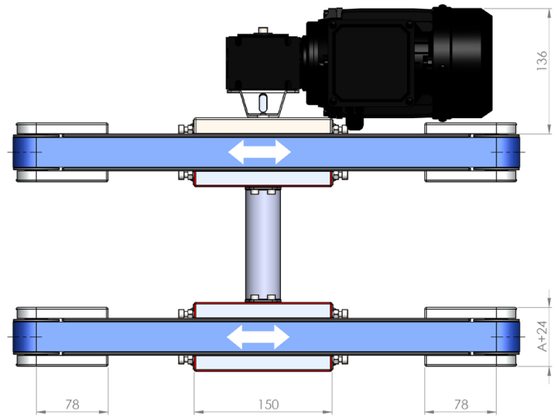

Side View

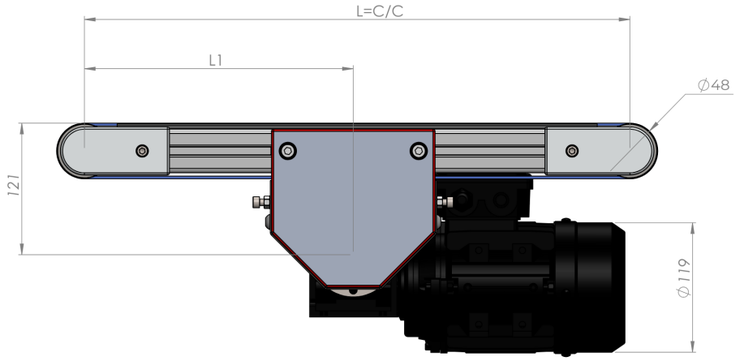

Front View

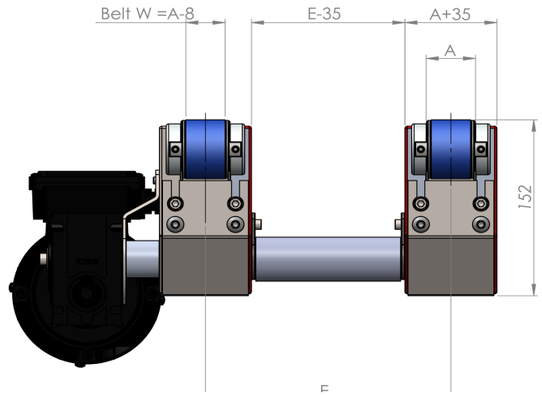

Accessories - Knife Edge

Speed
0 - 37 m/min

Load
0 - 100 kg

Width
40, 80, 120, 160, 200 mm

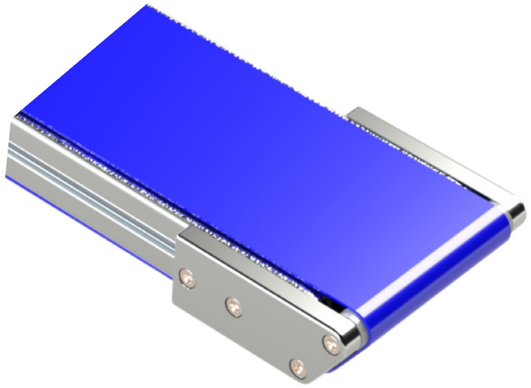

General technical data	
Conveyor width (A)	40, 80, 120, 160, 200, 250, 300, 400, 500 mm
Belt width	A - 10
Applicable with Conveyor Model	Motor Below / End Drive / Central Drive
Knife Edge Position - End Drive	1 Side
Knife Edge Position - Central Drive	2 Sides
Knife Edge Position - Motor Below	1 Side
Load	0 - 100 kg
Speed	0 - 37 m/min
Pulley Diameter	19 mm
Belt Type	PU

Sample View & Front View

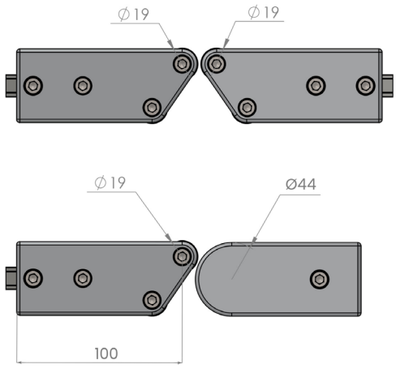

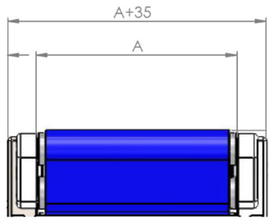

Your Partner in Automation Solutions

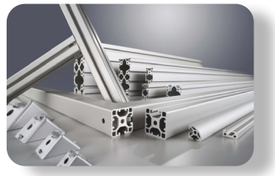
Item Aluminium Profiles


D30 Tube System


Work Bench System

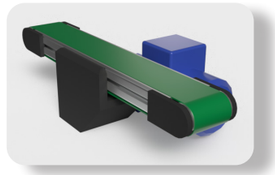
Conveyor Belt System

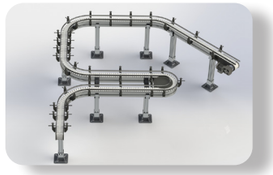
Chain Conveyors

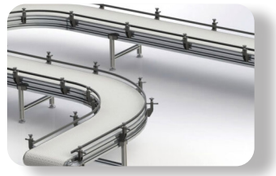
Modular Belt Conveyors


Pallet Conveyors


Ball Bushings


Linear Guides


Ball Screws

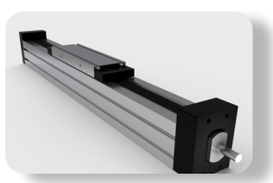
Linear Modules

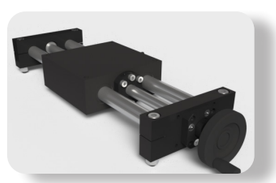
Adjustment Modules

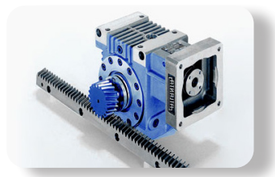
Rack and Pinion

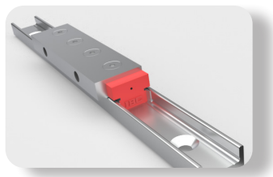
Compact Rail


FlexFit


Complete Mechanical Solutions


Light Telescopic Rail

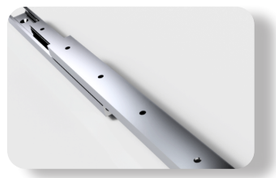
Heavy Telescopic Rail

AluFlexGroup
YOUR PARTNER IN AUTOMATION SOLUTIONS
AluFlex AB | item profiili oy | LinearModul A/S | AluFlex System AS

AluFlex AB
Kanongatan 84
254 67 Helsingborg
Tel +46 42 38 02 30
orders@aluflex.se
www.aluflex.se

LinearModul A/S
Sivlandvaenget 13B
5260 Odense S
Tel +45 65 91 72 10
orders@linearmodul.dk
www.linearmodul.dk

AluFlex System AS
Industrivegen 23B
Postboks 2069 Jessheim
Tel: +47 63 94 49 20
orders@aluflex.no
www.aluflex.no

item profiili oy
Lyhtykuja 6
00750 Helsinki, Finland
Puh: +358 9 854 56 50
orders@itemprofiili.fi
www.itemprofiili.fi